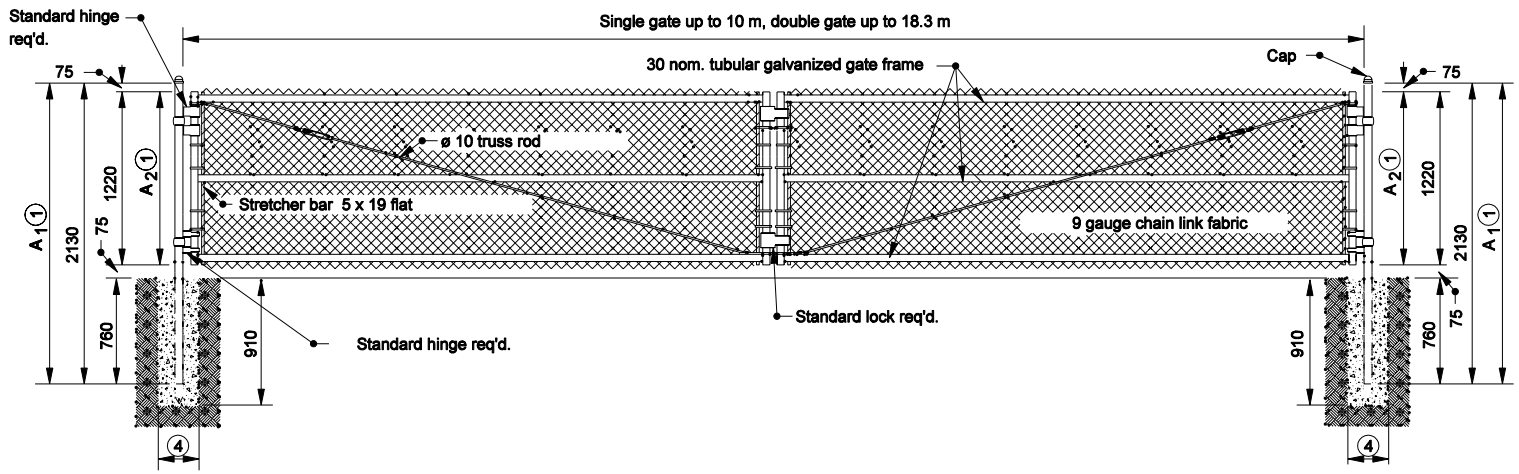

CHAIN LINK GATE

All dimensions are in mm unless otherwise specfied

INDIANA DEPARTMENT OF TRANSPORTATION

CHAIN LINK TYPE GATE

SEPTEMBER 2004

STANDARD DRAWING NO. 603-CLTF-03

RICHARD L. VanCLEAVE REGISTERED No. 9750 STATE OF INDIANA PROFESSIONAL ENGINEER

DESIGN STANDARDS ENGINEER

/s/ Richard L. VanCleave 9-01-04
DESIGN STANDARDS ENGINEER DATE

/s/ Richard K. Smutzer 9-01-04
CHIEF HIGHWAY ENGINEER DATE

GENERAL NOTES

(1) For each additional 300 in height increase dimension A_1 and A_2 by 300.

2. See Standard Drawing 603-CLTF-01 for the tubular post chart.

3. Dimensions as shown are for 1220 fence.

(4) Diameter equals 250 plus the outside diameter of the post.