NOTES:

1. These dimensions shall be adjusted as required to accommodate steel post flange.
2. Timber blocks shown in either Detail A or Detail B may be used.

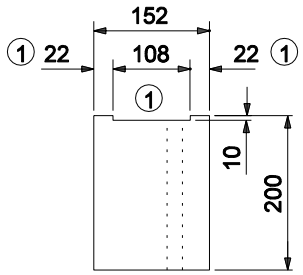

TOP VIEW

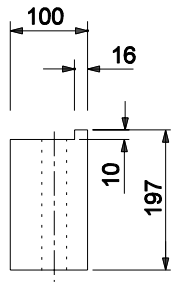

TOP VIEW

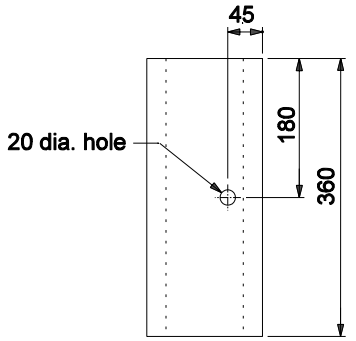

FRONT VIEW

TIMBER BLOCK DETAIL A

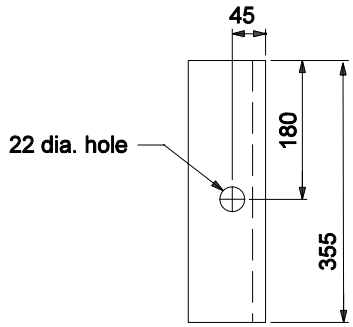

FRONT VIEW

TIMBER BLOCK DETAIL B

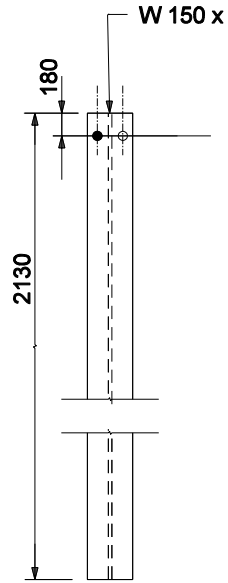

FRONT VIEW

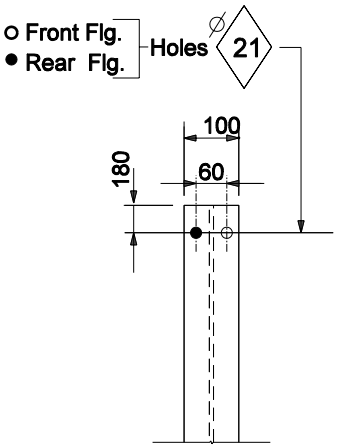

FRONT VIEW

HOLE PATTERN

STEEL POST DETAIL

All dimensions are in mm unless otherwise specified

INDIANA DEPARTMENT OF TRANSPORTATION

W - BEAM
GUARDRAIL COMPONENTS

SEPTEMBER 2004

STANDARD DRAWING NO. 601-WBGC-03

RICHARD L. VanCLEAVE REGISTERED No. 9750 STATE OF INDIANA PROFESSIONAL ENGINEER

DESIGN STANDARDS ENGINEER

/s/ Richard L. VanCleave 3-01-04
DESIGN STANDARDS ENGINEER DATE

/s/ Richard K. Smutzer 3-01-04
CHIEF HIGHWAY ENGINEER DATE