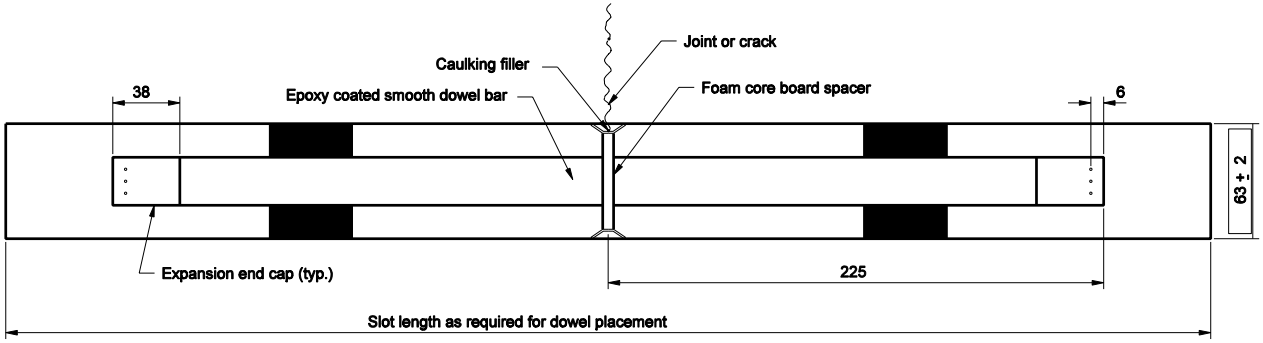

PLAN

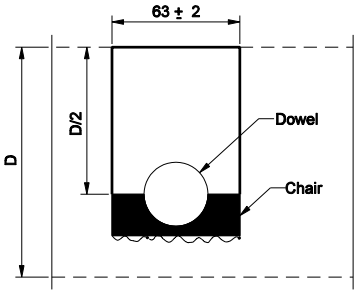

SECTION A-A

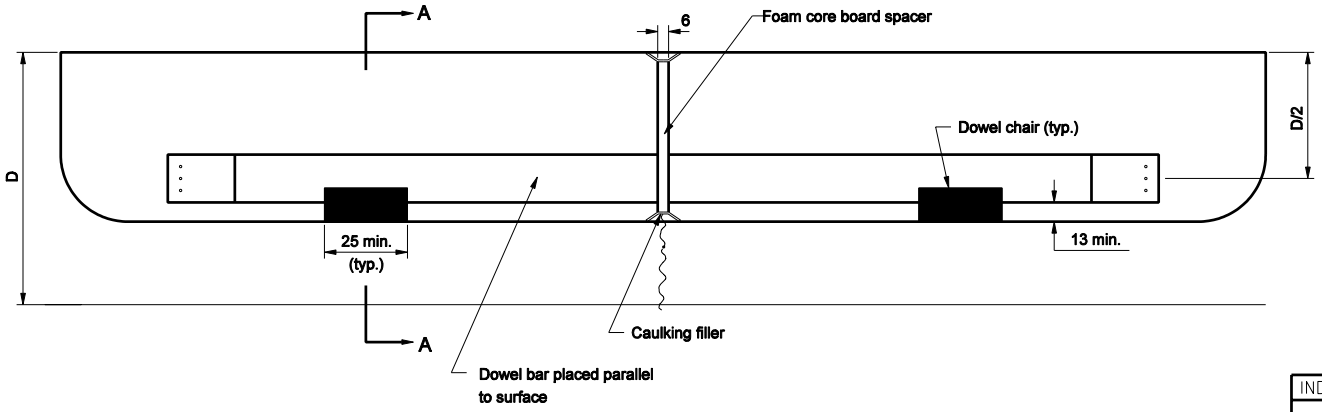

ELEVATION

NOTES:

1. For dowel slot layout requirements, see Standard Drawing 305-RLTC-02.

DOWEL BAR SIZES	
Pavement Thickness D	Minimum Dowel Bar Diameter
Less than 300	32
Greater than or equal to 300	38

DOWEL SLOT DETAILS

All dimensions are in mm unless otherwise specfied

INDIANA DEPARTMENT OF TRANSPORTATION

RETROFIT LOAD TRANSFER FOR PCCP

SEPTEMBER 2004

STANDARD DRAWING NO. 507-RLTC-01

RICHARD L. VanCLEAVE REGISTERED No. 9750 STATE OF INDIANA PROFESSIONAL ENGINEER

DESIGN STANDARDS ENGINEER

/s/ Richard L. VanCleave 9-01-04
DESIGN STANDARDS ENGINEER DATE

/s/ Richard K. Smutzer 9-01-04
CHIEF HIGHWAY ENGINEER DATE