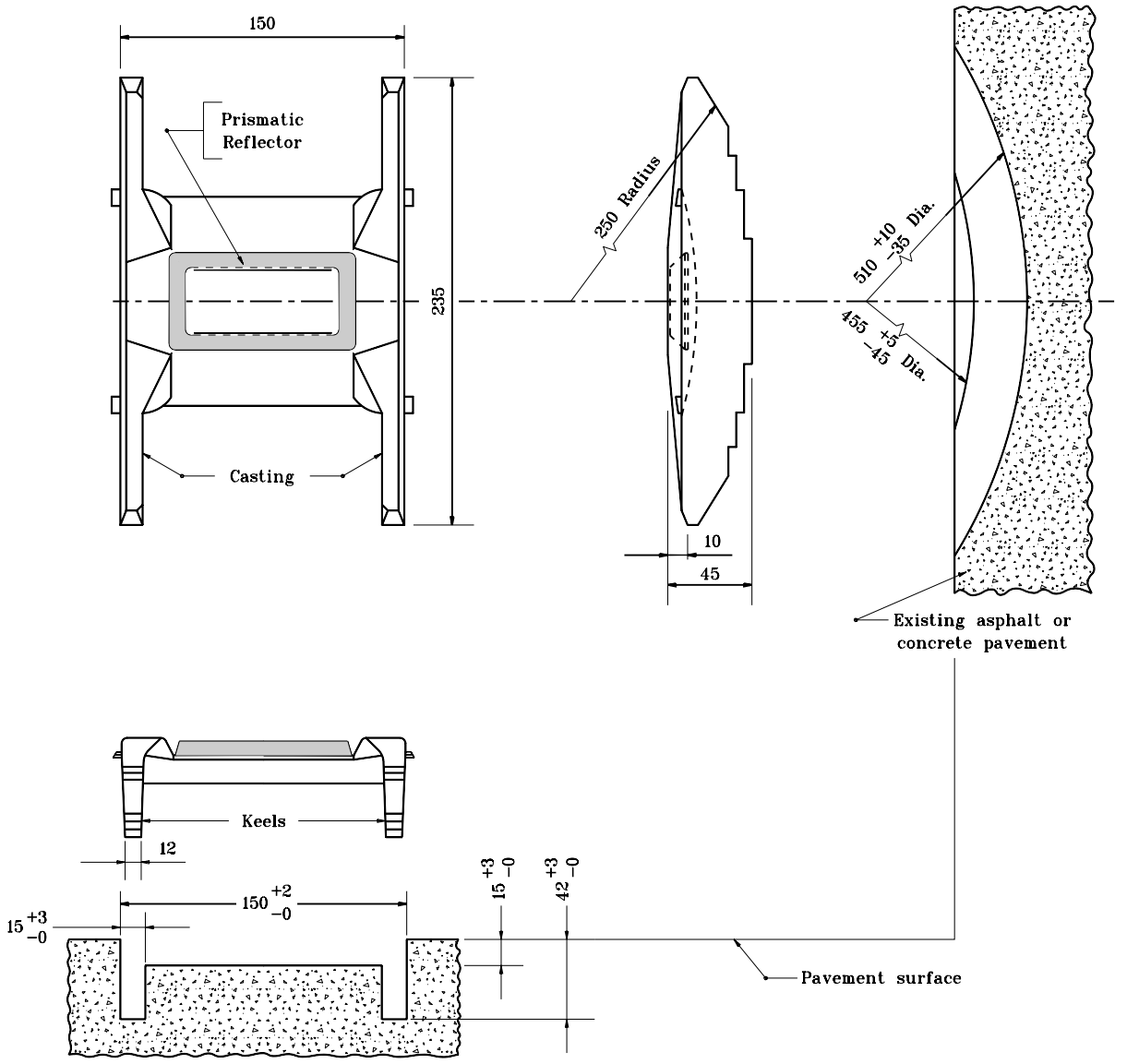

CAST METAL BASE

All dimensions are in mm unless otherwise specified.

INDIANA DEPARTMENT OF TRANSPORTATION

RAISED PAVEMENT MARKER CAST METAL BASE, TYPE 1

SEPTEMBER 1998

STANDARD DRAWING NO. **808-MKRM-10**

ANTHONY L. UREMOVICH REGISTERED No. 18095 STATE OF INDIANA PROFESSIONAL ENGINEER

DESIGN STANDARDS ENGINEER

/s/ Anthony L. Uremovich 9-01-98
DESIGN STANDARDS ENGINEER DATE

/s/ Donald W. Lucas 9-01-98
CHIEF HIGHWAY ENGINEER DATE

Source Sheet: MT19