NOTES

1. Retaining wall detail is used for tower installed on sloping ground.
2. Slope grading around the concrete pad to be as shown unless otherwise directed.
3. Handhole shall be centered in front of concrete pad.

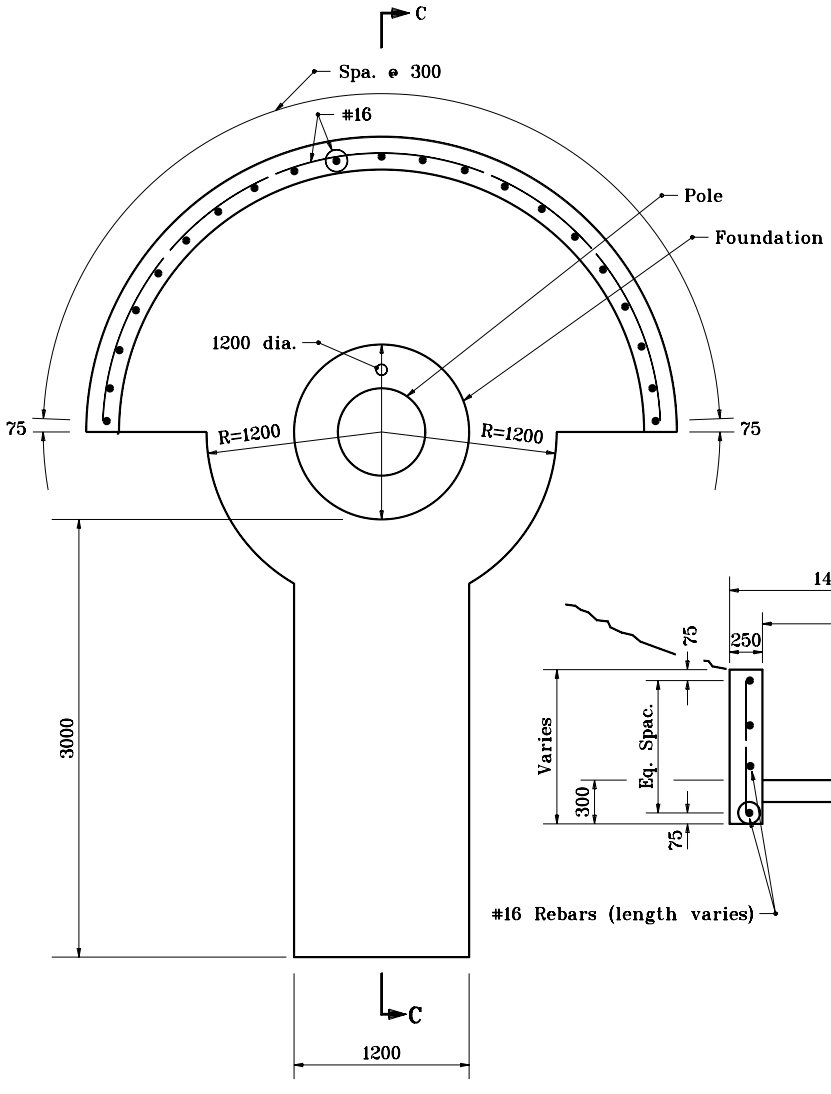

EXTERNAL WINCH CONCRETE PAD
WITH RETAINING WALL

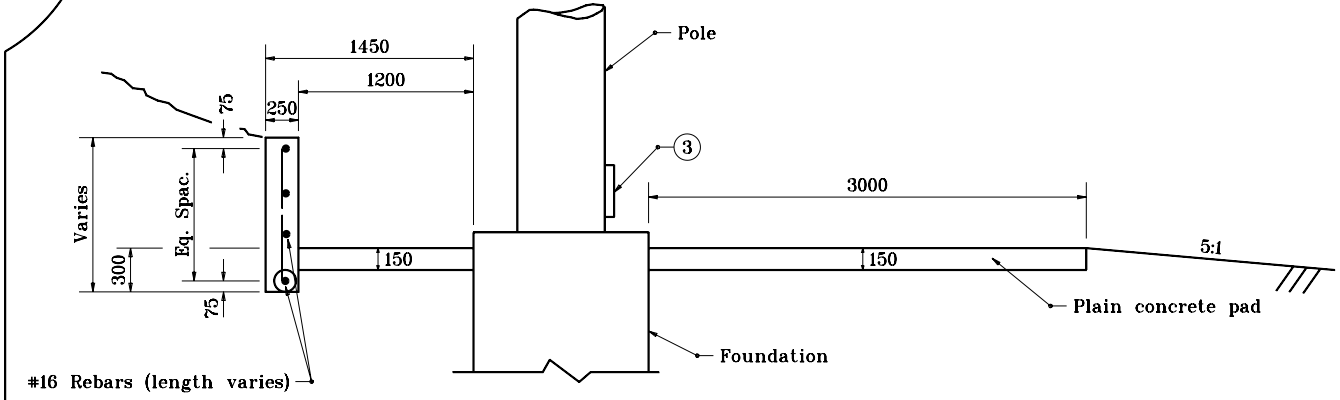

SECTION C-C

All dimensions are in mm unless otherwise specified.

INDIANA DEPARTMENT OF TRANSPORTATION

HIGH MAST TOWER
CONCRETE PAD

JANUARY 2000

STANDARD DRAWING NO. **807-LTHM-04**

ANTHONY L. UREMOVICH REGISTERED No. 18095 STATE OF INDIANA PROFESSIONAL ENGINEER

DESIGN STANDARDS ENGINEER

/s/ Anthony L. Uremovich 1-03-00
DESIGN STANDARDS ENGINEER DATE

/s/ Firooz Zandi 1-03-00
CHIEF HIGHWAY ENGINEER DATE