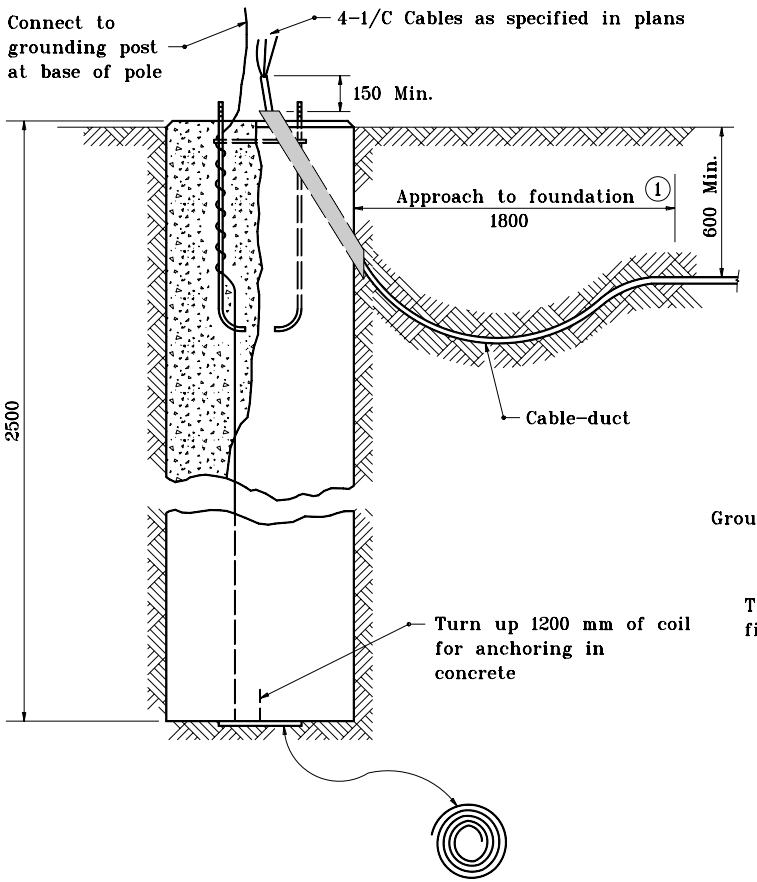


**DETAIL OF COIL**

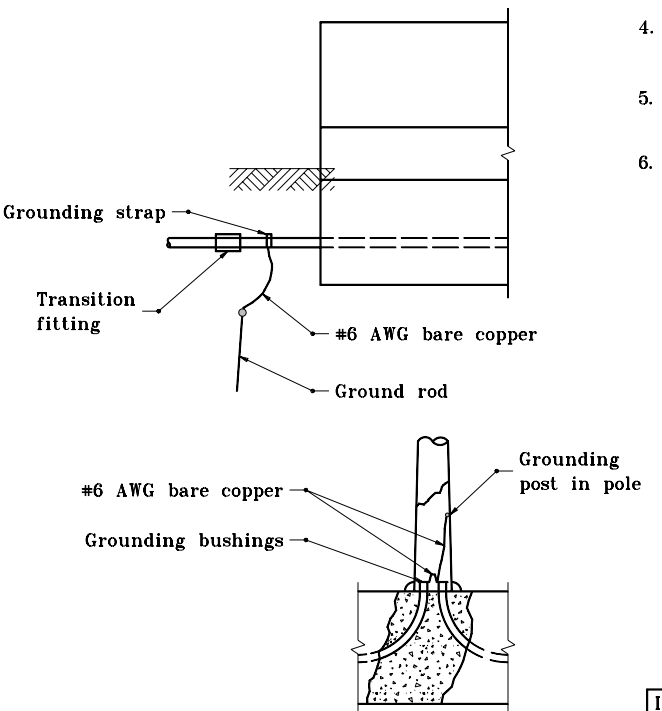


**BRIDGE GROUNDING**

## GENERAL NOTES

1. 1800 mm approach to foundation shall be trenched.
2. Bottom of trench shall be graded so as to provided a smooth, uniform ramp to the entry sleeve of the foundation.
3. Each cable-duct shall have its own entry sleeve. There shall be at least two entry sleeves per footing.
4. Coil to be of #6 AWG copper approximately 4.5 m long.
5. Place felt between concrete and coil to prevent bonding.
6. Coil method of grounding may be used with precast foundation.

All dimensions are in mm unless otherwise specified.

INDIANA DEPARTMENT OF TRANSPORTATION

**LIGHT FOUNDATION**

SEPTEMBER 2000

STANDARD DRAWING NO. **807-LTFD-06**

ANTHONY L. UREMOVICH REGISTERED No. 18095 STATE OF INDIANA PROFESSIONAL ENGINEER

DESIGN STANDARDS ENGINEER

/s/ Anthony L. Uremovich 9-01-00
DESIGN STANDARDS ENGINEER DATE

/s/ Firooz Zandi 9-01-00
CHIEF HIGHWAY ENGINEER DATE