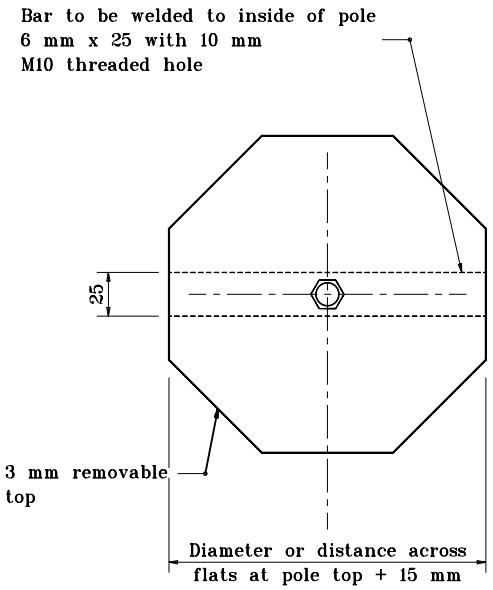

TOP COVER

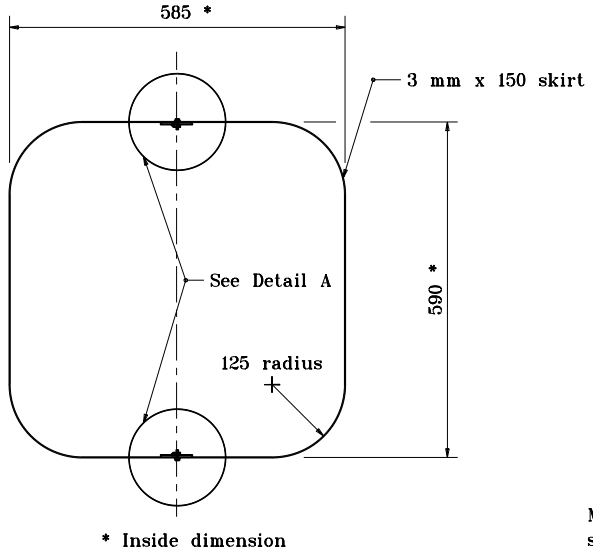

METAL SKIRT (BASE PLATE)

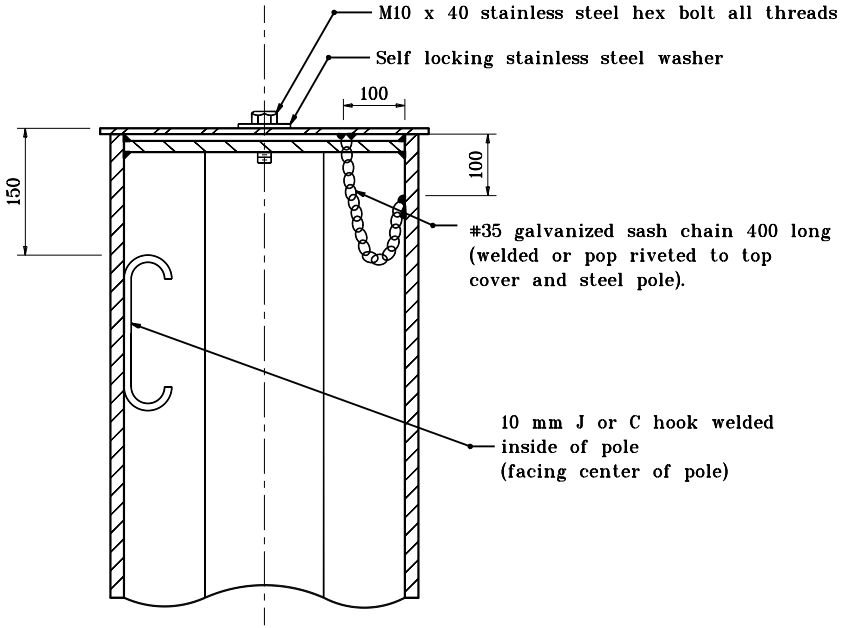

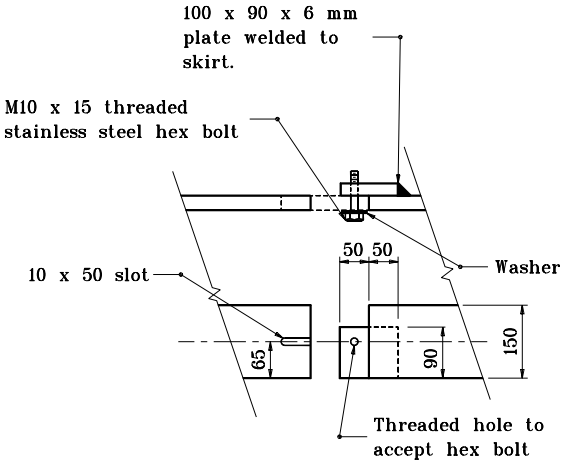

DETAIL A

All dimensions are in mm unless otherwise specified.

INDIANA DEPARTMENT OF TRANSPORTATION

TOP COVER AND METAL SKIRT OF SIGNAL STEEL STRAIN POLE

MARCH 1995

STANDARD DRAWING NO. **805-SGSP-02**

ANTHONY L. UREMOVICH REGISTERED No. 18095 STATE OF INDIANA PROFESSIONAL ENGINEER

DESIGN STANDARDS ENGINEER

/s/ Anthony L. Uremovich 3-01-95
DESIGN STANDARDS ENGINEER DATE

/s/ Donald W. Lucas 3-01-95
CHIEF HIGHWAY ENGINEER DATE

Source Sheet: NONE