GENERAL NOTES

(1) Alternate 150 x 150 x 13 sq. washer with hex nut welded to lower end.

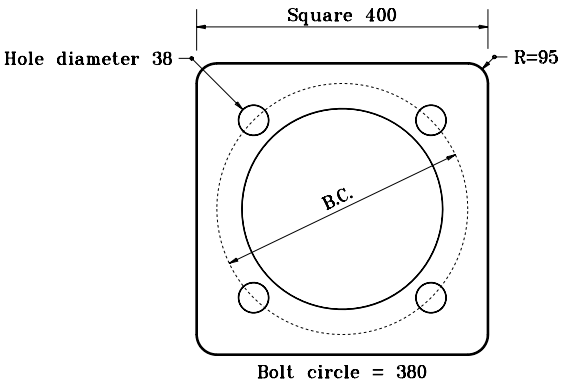

STEEL BASE PLATE DETAIL

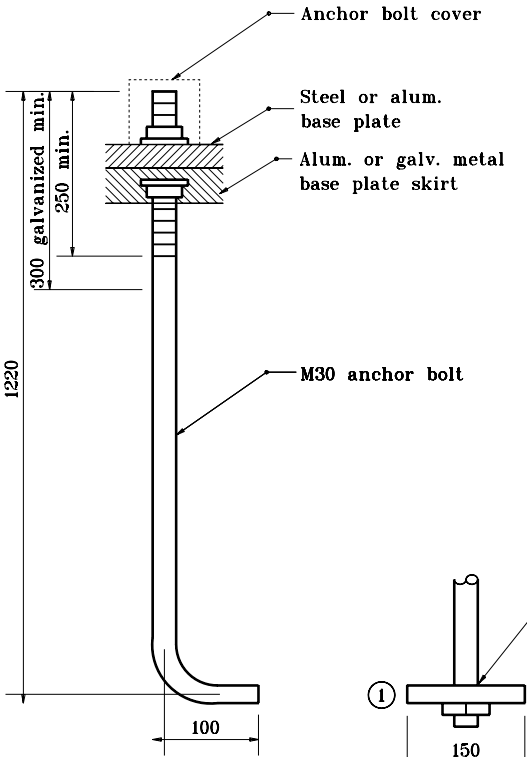

DETAIL D

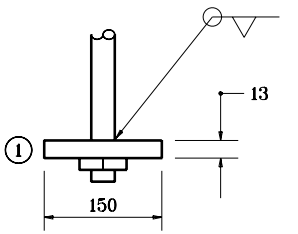

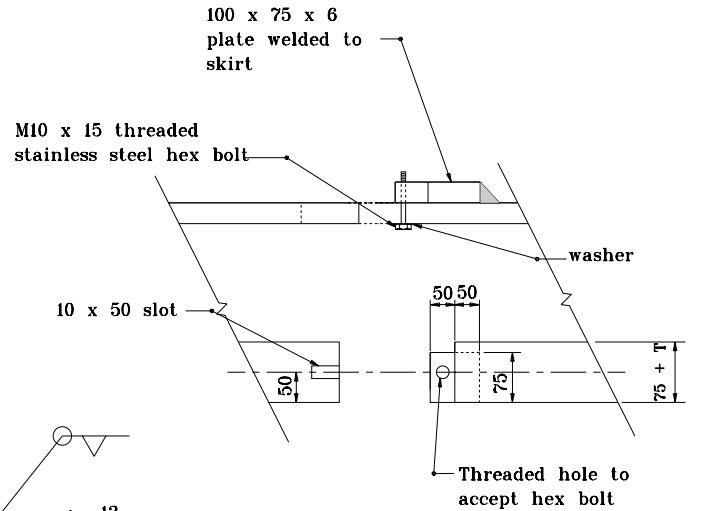

T = Thickness of anchor base

DETAIL A

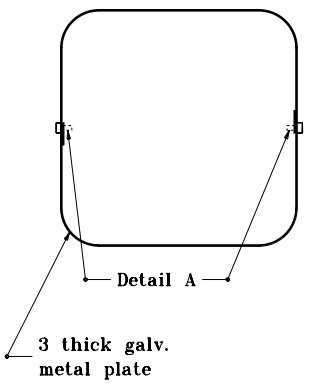

METAL COVER DETAIL

All dimensions are in mm unless otherwise specified.

INDIANA DEPARTMENT OF TRANSPORTATION

SIGNAL CANTILEVER ANCHOR BOLTS, PLATES, AND COVERS

SEPTEMBER 1998

STANDARD DRAWING NO. **805-SGMA-05**

ANTHONY L. UREMOVICH REGISTERED No. 18095 STATE OF INDIANA PROFESSIONAL ENGINEER

DESIGN STANDARDS ENGINEER

/s/ Anthony L. Uremovich — DESIGN STANDARDS ENGINEER — 9-01-98 DATE

/s/ Donald W. Lucas — CHIEF HIGHWAY ENGINEER — 9-01-98 DATE

Source Sheet: NONE