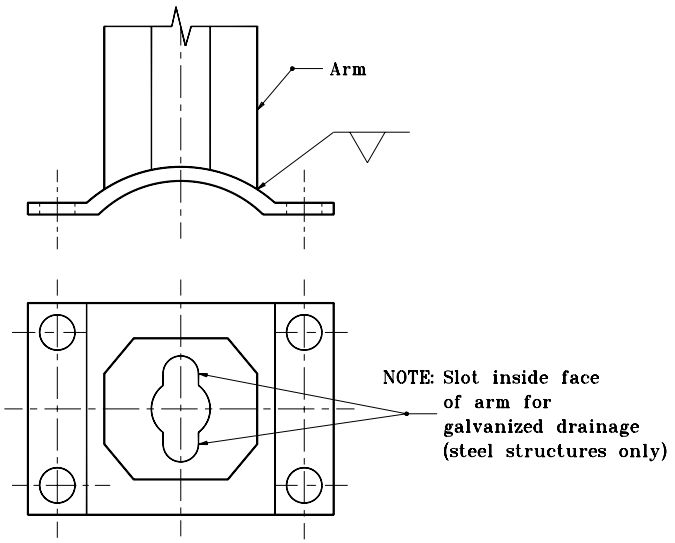

(Connection clamp)

DETAIL A

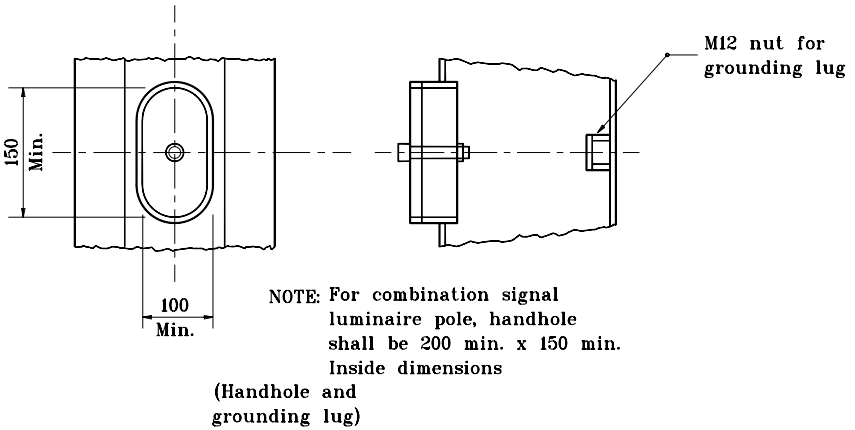

(Handhole and grounding lug)

DETAIL B

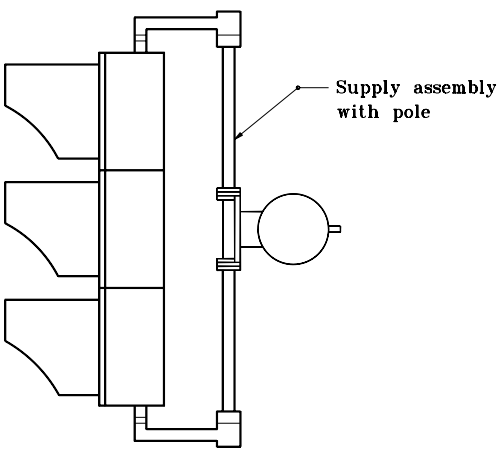

(Signal Head Mounting Assembly – Typ.)

DETAIL C

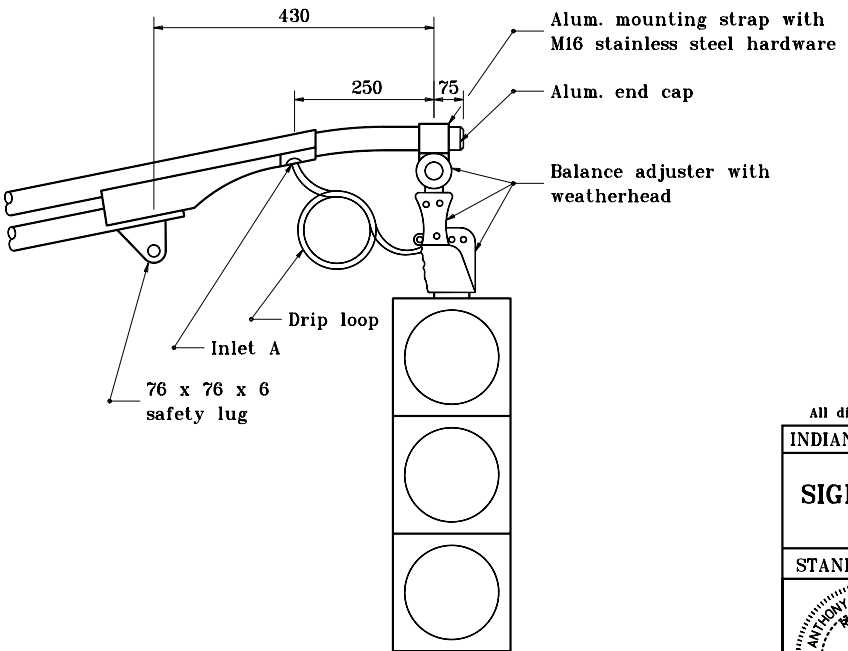

DETAIL D

All dimensions are in mm unless otherwise specified.

INDIANA DEPARTMENT OF TRANSPORTATION

SIGNAL CANTILEVER DETAILS

MAY 1998

STANDARD DRAWING NO. **805-SGMA-04**

ANTHONY L. UREMOVICH REGISTERED No. 18095 STATE OF INDIANA PROFESSIONAL ENGINEER

DESIGN STANDARDS ENGINEER

/s/ Anthony L. Uremovich 5-01-98
DESIGN STANDARDS ENGINEER DATE

/s/ Donald W. Lucas 5-01-98
CHIEF HIGHWAY ENGINEER DATE

Source Sheet: NONE