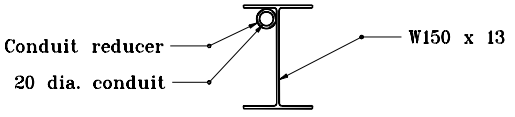

SECTION A-A

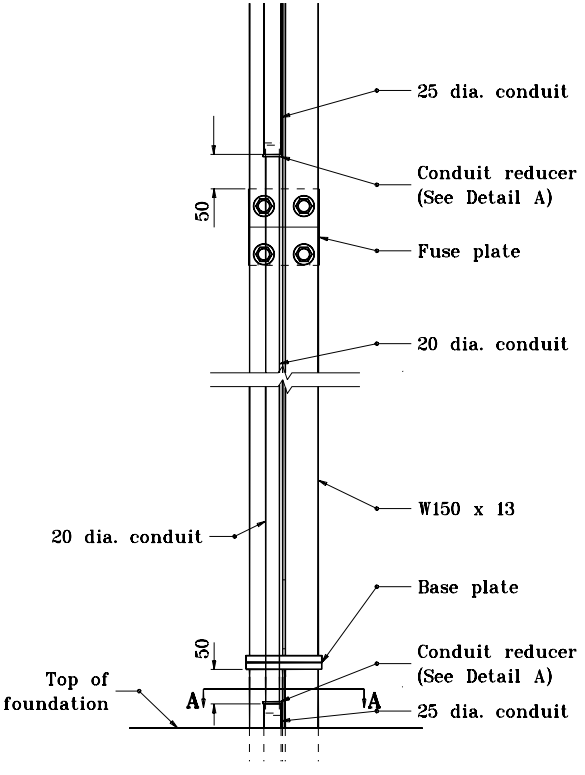

CONDUIT DETAIL

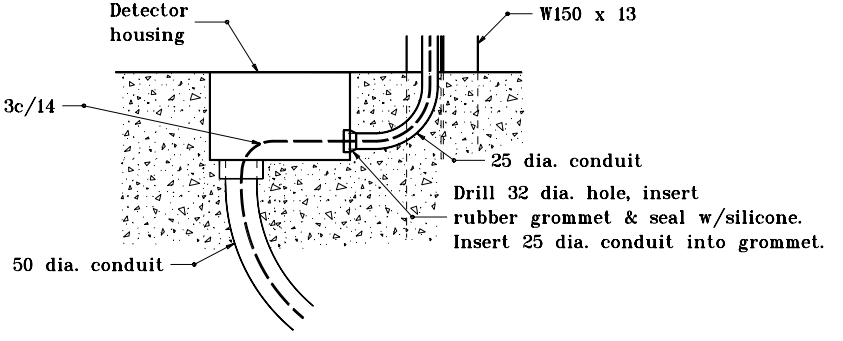

DETECTOR HOUSING DETAIL

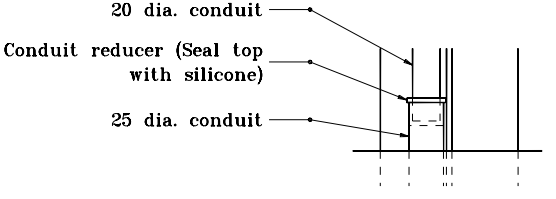

DETAIL A
(INVERT FOR TOP CONDUIT JOINT)

All dimensions are in mm unless otherwise specified.

INDIANA DEPARTMENT OF TRANSPORTATION

FLASHING BEACON WITH WARNING SIGN DETAILS

SEPTEMBER 1998

STANDARD DRAWING NO. **805-SGFB-01A**

ANTHONY L. UREMOVICH REGISTERED No. 18095 STATE OF INDIANA PROFESSIONAL ENGINEER

DESIGN STANDARDS ENGINEER

/s/ Anthony L. Uremovich 9-01-98
DESIGN STANDARDS ENGINEER DATE

/s/ Donald W. Lucas 9-01-98
CHIEF HIGHWAY ENGINEER DATE

Source Sheet: NONE