GENERAL NOTES

1. Approximate weight for cast iron ring and cover shall be 145 kg.

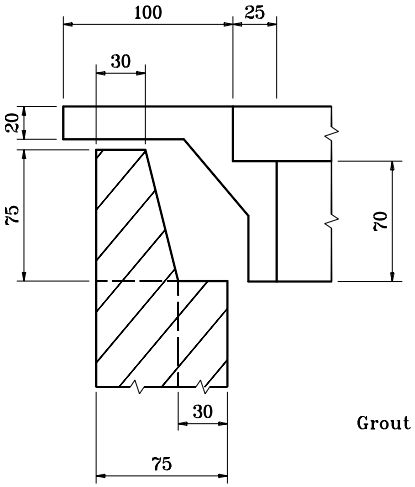

DETAIL A

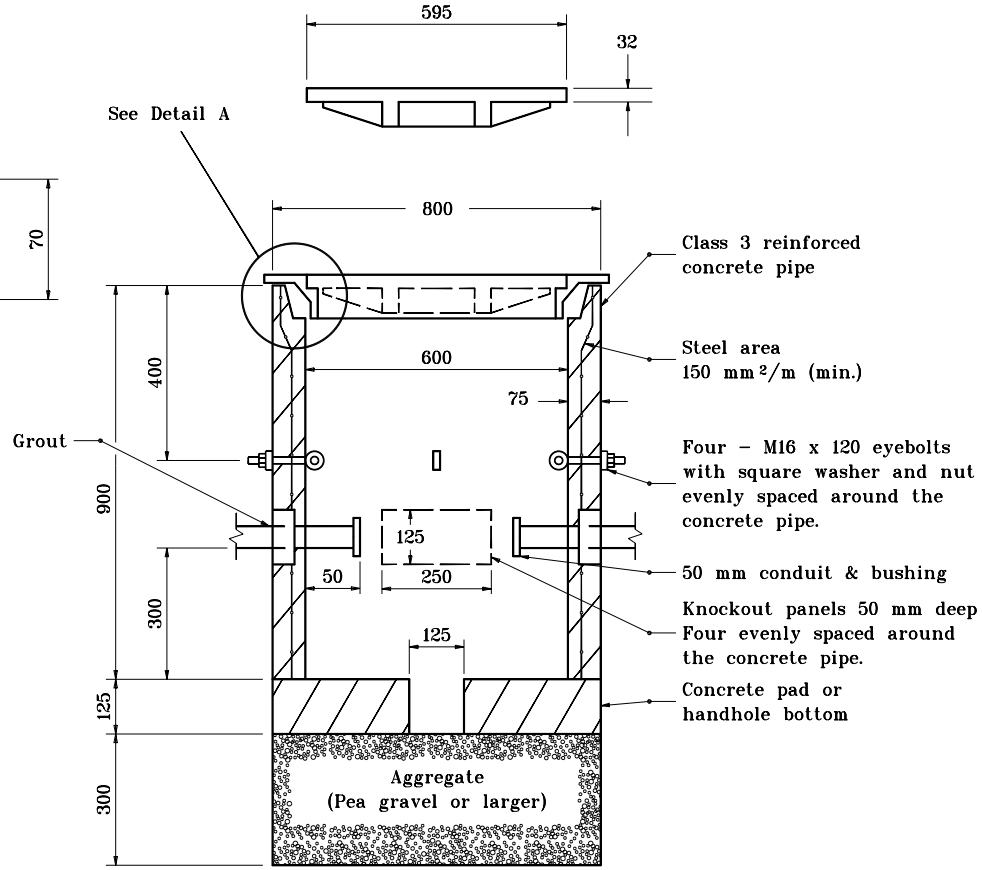

HANDHOLE

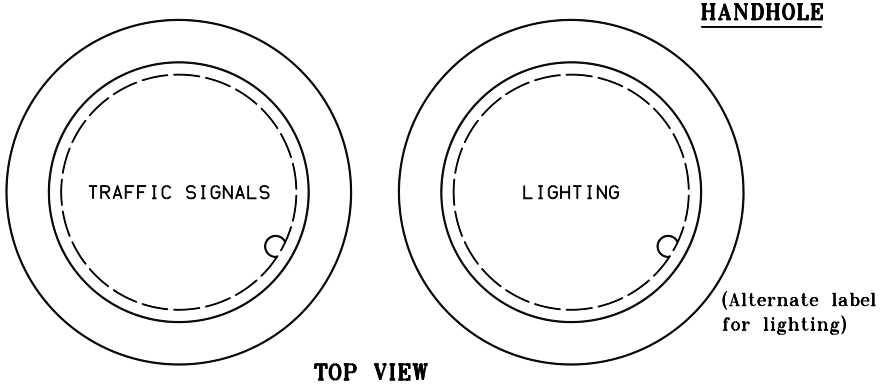

TOP VIEW

All dimensions are in mm unless otherwise specified.

INDIANA DEPARTMENT OF TRANSPORTATION

SIGNAL HANDHOLE

JUNE 1996

STANDARD DRAWING NO. **805-SGCF-04**

ANTHONY L. UREMOVICH REGISTERED No. 18095 STATE OF INDIANA PROFESSIONAL ENGINEER

DESIGN STANDARDS ENGINEER

/s/ Anthony L. Uremovich 6-03-96
DESIGN STANDARDS ENGINEER DATE

/s/ Donald W. Lucas 6-03-96
CHIEF HIGHWAY ENGINEER DATE

Source Sheet: NONE