GENERAL NOTES

1. Horizontal rail member shall be continuous thru fitting. Provide 12 mm hole in fitting for M10 bolt. Field drill 12 mm hole in horizontal rail member. Provide M10 washer & M10 locknut for bolt.

2. Rail and grating shall span a minimum of three brackets.

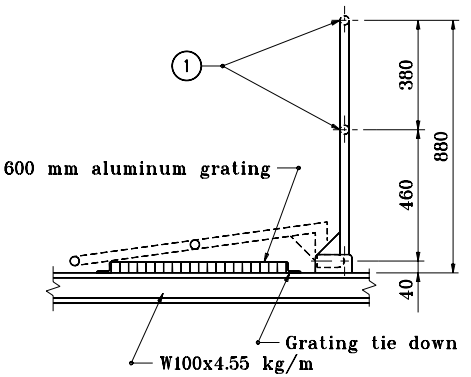

SIDE ELEVATION

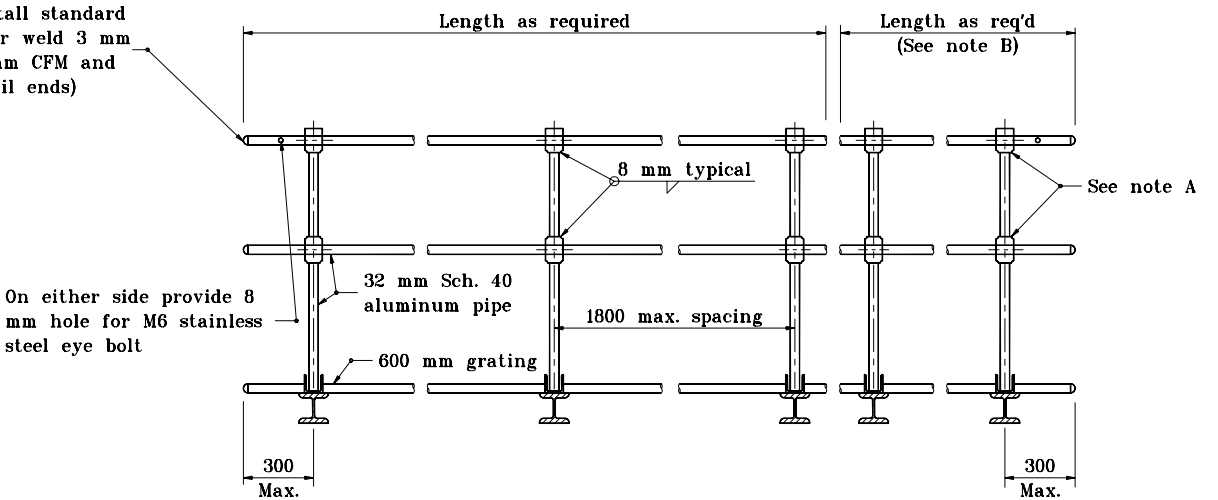

FRONT ELEVATION

All dimensions are in mm unless otherwise specified.

INDIANA DEPARTMENT OF TRANSPORTATION

SIGN WALKWAY/ HANDRAIL DETAIL

SEPTEMBER 2001

STANDARD DRAWING NO. **802-SNWW-04**

ANTHONY L. UREMOVICH REGISTERED No. 18095 STATE OF INDIANA PROFESSIONAL ENGINEER

DESIGN STANDARDS ENGINEER

/s/ Anthony L. Uremovich 9-04-01
DESIGN STANDARDS ENGINEER DATE

/s/ Firooz Zandi 9-04-01
CHIEF HIGHWAY ENGINEER DATE