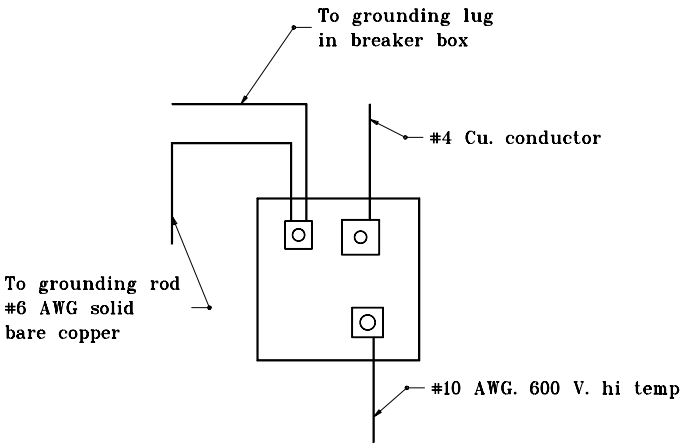

NEUTRAL GROUND LUG DETAIL B

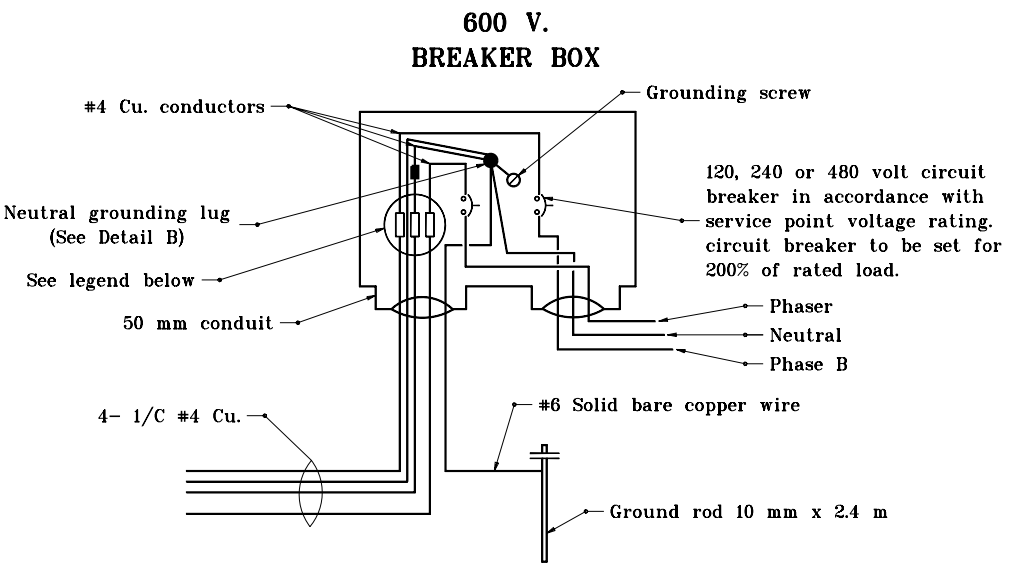

BREAKER BOX WIRING DETAIL

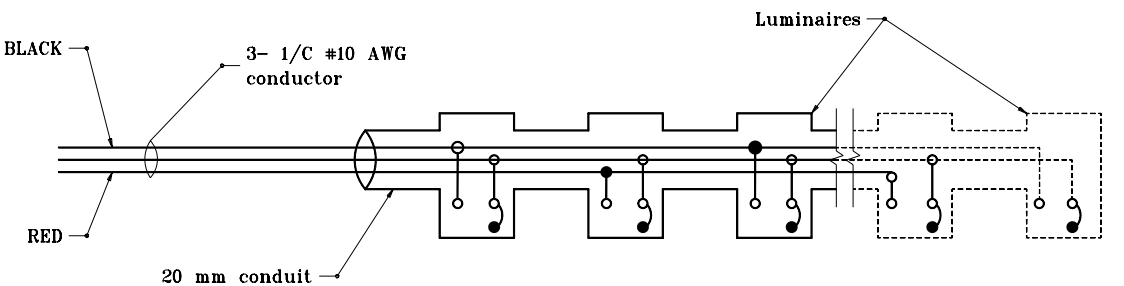

Alternate connections to balance load.

(For connection to 120 V. or 240 V. phase to neutral)

LUMINAIRE WIRING DETAIL

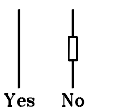

GENERAL NOTES

1. Breaker panel wiring to be used with bridge bracket sign illumination, or when lighting overhead sign is not a roadway lighting system.
2. Oxidation inhibitor shall be liberally applied to all surfaces that mate with a dissimilar material.

All dimensions are in mm unless otherwise specified.

INDIANA DEPARTMENT OF TRANSPORTATION

SIGN WIRING DETAILS

SEPTEMBER 2001

STANDARD DRAWING NO. **802-SNWR-02**

ANTHONY L. UREMOVICH REGISTERED No. 18095 STATE OF INDIANA PROFESSIONAL ENGINEER

DESIGN STANDARDS ENGINEER

/s/ Anthony L. Uremovich 9-04-01
DESIGN STANDARDS ENGINEER DATE

/s/ Firooz Zandi 9-04-01
CHIEF HIGHWAY ENGINEER DATE