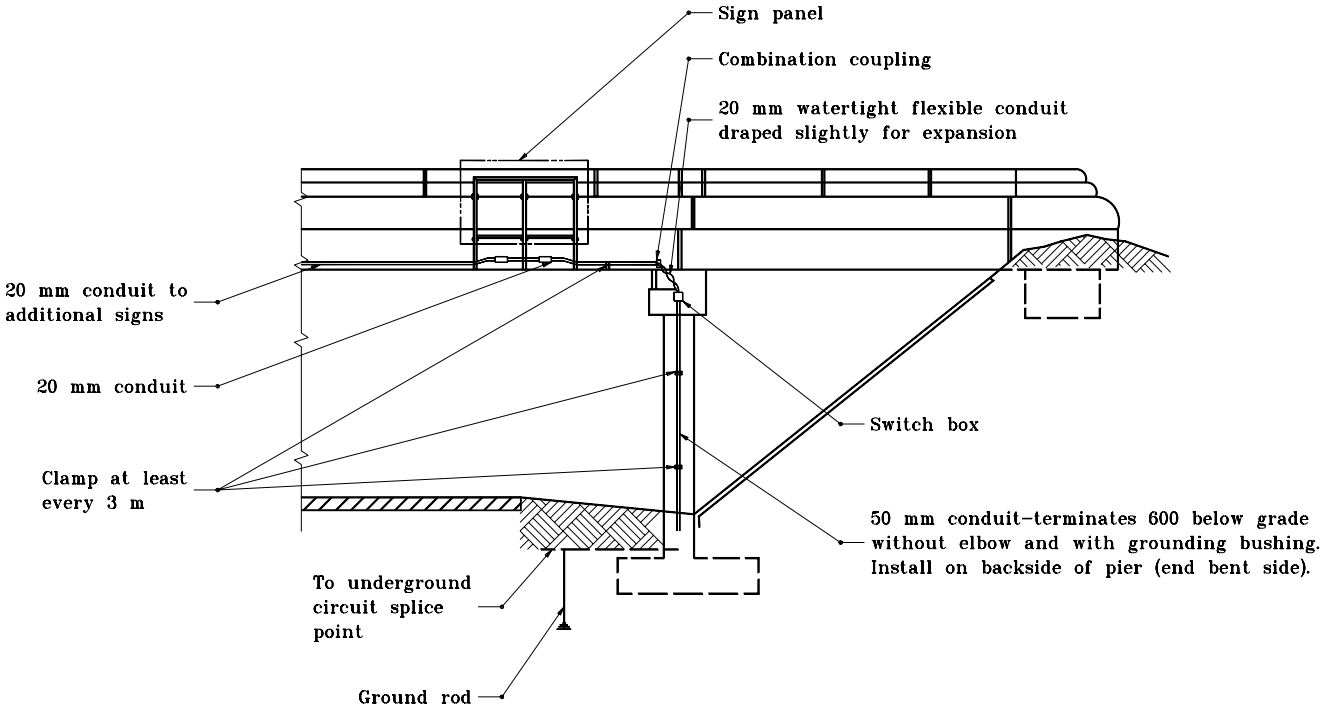

BRIDGE A

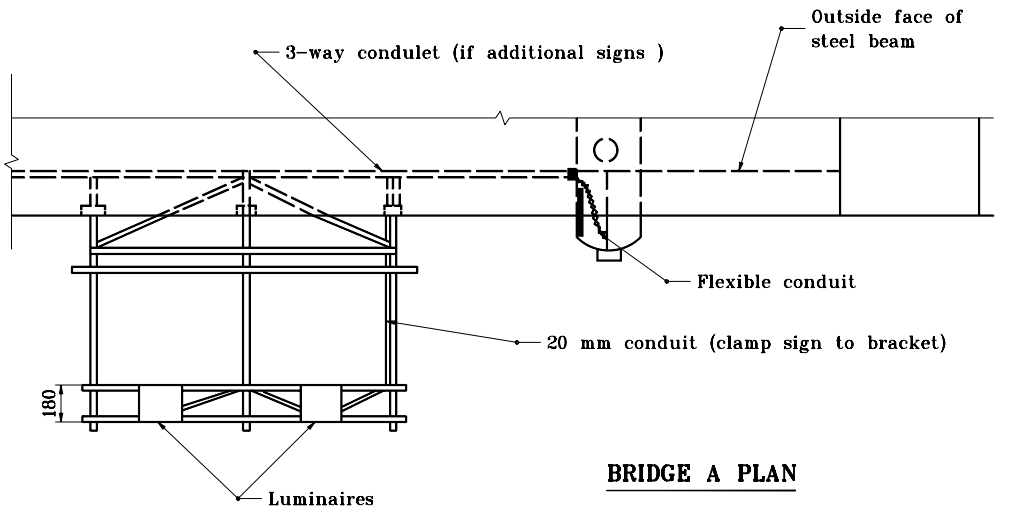

BRIDGE A PLAN

All dimensions are in mm unless otherwise specified.

INDIANA DEPARTMENT OF TRANSPORTATION

SIGN ILLUMINATION DETAILS

SEPTEMBER 2001

STANDARD DRAWING NO. **802–SNIL–01**

ANTHONY L. UREMOVICH REGISTERED No. 18095 STATE OF INDIANA PROFESSIONAL ENGINEER

DESIGN STANDARDS ENGINEER

/s/ Anthony L. Uremovich 9–04–01
DESIGN STANDARDS ENGINEER DATE

/s/ Firooz Zandi 9–04–01
CHIEF HIGHWAY ENGINEER DATE