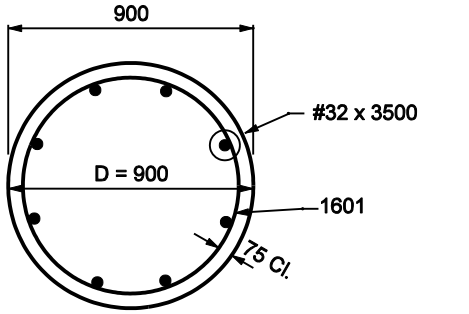

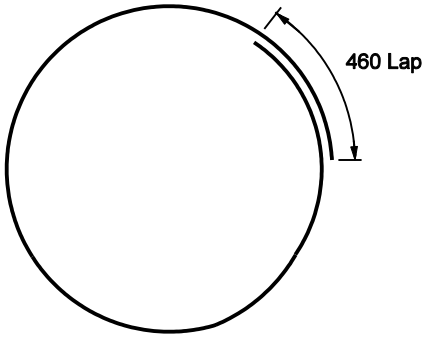

1601 x 2820

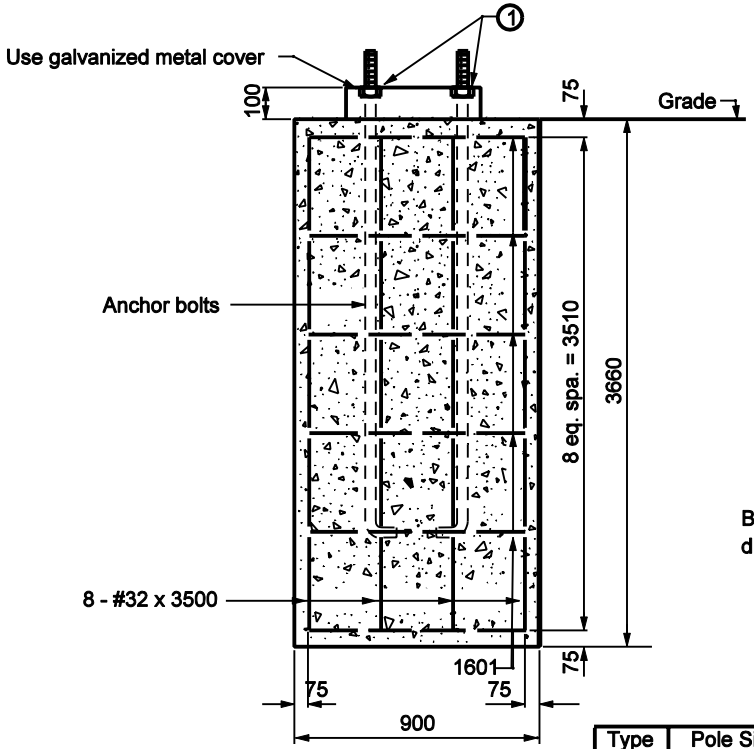

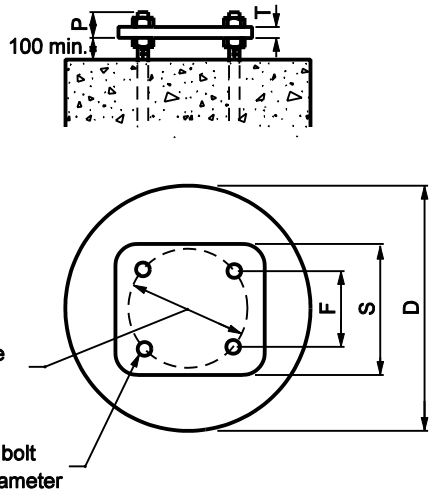

GENERAL NOTES

1. Square nut under base plate for plumbing or raking pole.

Type	Pole Size	Gauge	D	B	F	H	P	R	S	T	Anchor bolts
IV	300 x 7.3 m	0	900	400	288	54	95	95	432	50	45 x 2.3 m
	350 x 7.9 m	0	900	510	358	66	100	115	520	50	50 x 2.4 m
	375 x 9.1 m	0	900	560	394	66	100	118	584	50	50 x 2.4 m

All Dimension are in mm unless otherwise specfied

INDIANA DEPARTMENT OF TRANSPORTATION

CABLE SPAN SIGN FOUNDATION DETAILS

MARCH 2003

STANDARD DRAWING NO. 802-SNCS-02

RICHARD L. VanCLEAVE REGISTERED No. 9750 STATE OF INDIANA PROFESSIONAL ENGINEER

DESIGN STANDARDS ENGINEER

/s/ Richard L. VanCleave 3-03-03
DESIGN STANDARDS ENGINEER DATE

/s/ Richard K. Smutzer 3-03-03
CHIEF HIGHWAY ENGINEER DATE