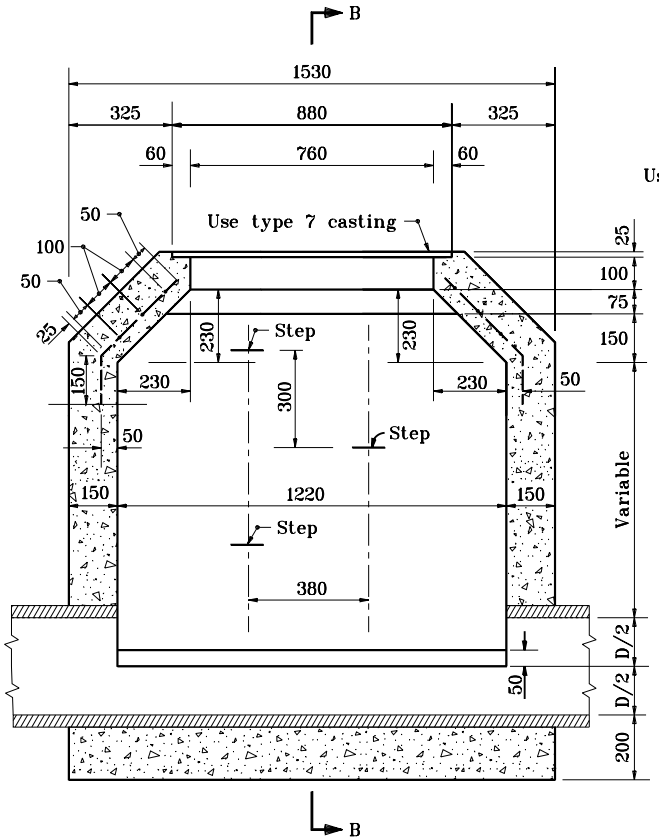

SECTION A-A

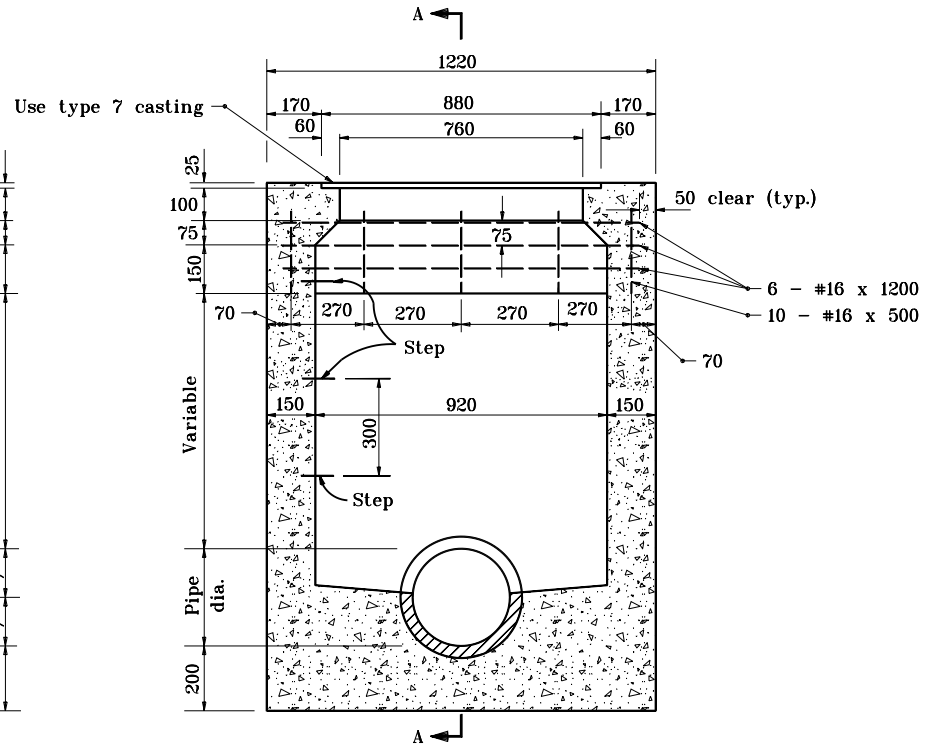

SECTION B-B

All dimensions are in mm unless otherwise specified.

INDIANA DEPARTMENT OF TRANSPORTATION

INLET TYPE G

SEPTEMBER 1997

STANDARD DRAWING NO. **720-INST-05**

ANTHONY L. UREMOVICH REGISTERED No. 18095 STATE OF INDIANA PROFESSIONAL ENGINEER

DESIGN STANDARDS ENGINEER

/s/ Anthony L. Uremovich 9-01-97
DESIGN STANDARDS ENGINEER DATE

/s/ Donald W. Lucas 9-01-97
CHIEF HIGHWAY ENGINEER DATE

Source Sheet: MD