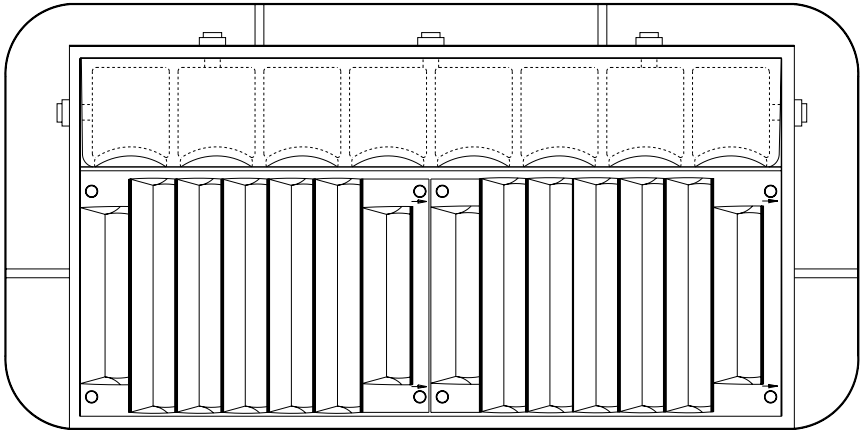

GENERAL NOTES

1. Curb adjustment 140 to 241

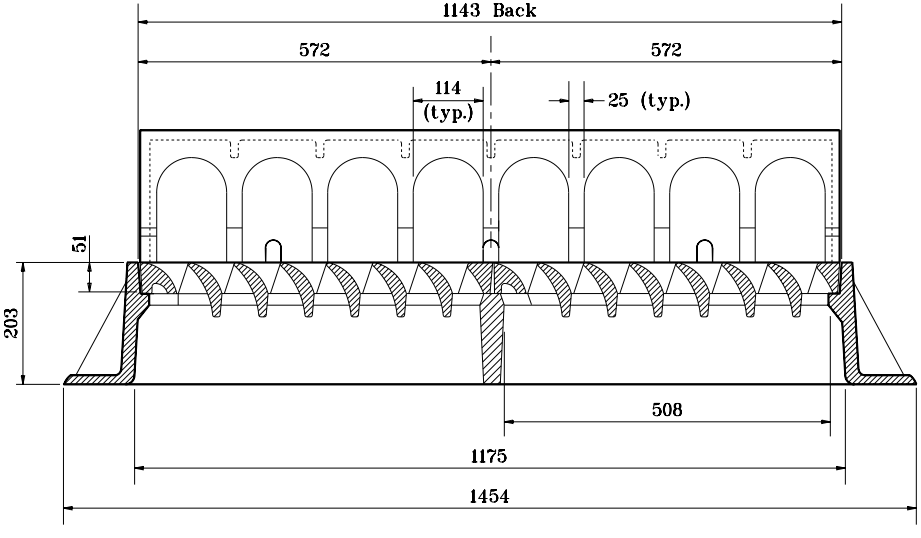

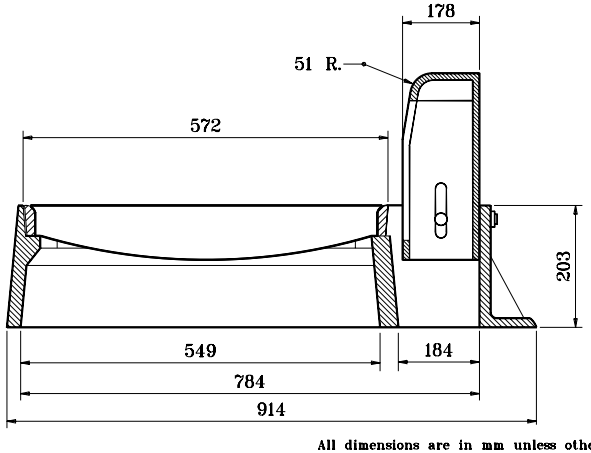

All dimensions are in mm unless otherwise specified.

INDIANA DEPARTMENT OF TRANSPORTATION

CASTING TYPE 15 (ALTERNATE)
FRAME, GRATE, AND CURB BOX

SEPTEMBER 1998

STANDARD DRAWING NO. **720-ICCA-19**

ANTHONY L. UREMOVICH REGISTERED No. 18095 STATE OF INDIANA PROFESSIONAL ENGINEER

DESIGN STANDARDS ENGINEER

/s/ Anthony L. Uremovich 9-01-98
DESIGN STANDARDS ENGINEER DATE

/s/ Donald W. Lucas 9-01-98
CHIEF HIGHWAY ENGINEER DATE

Source Sheet: MC3