GENERAL NOTES

1. Curb box adjustable from 133 to 222.

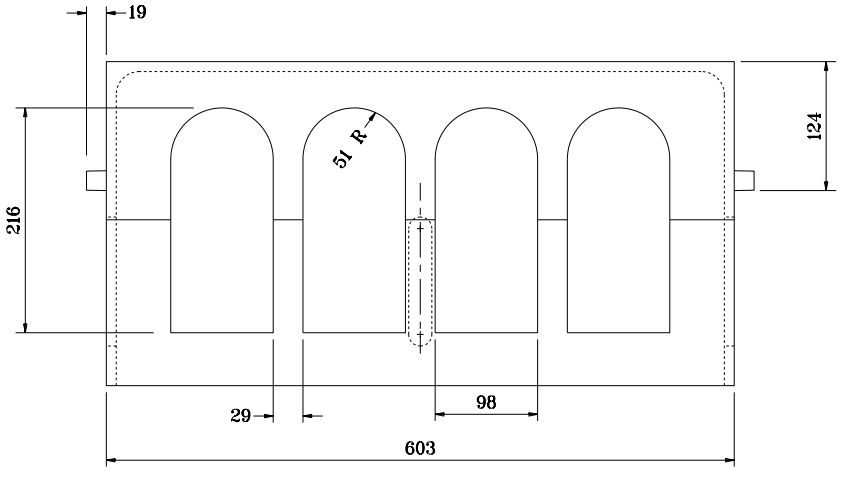

FRONT

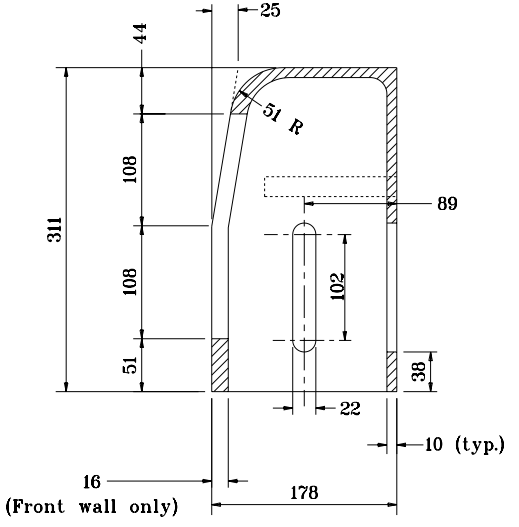

SECTION A–A

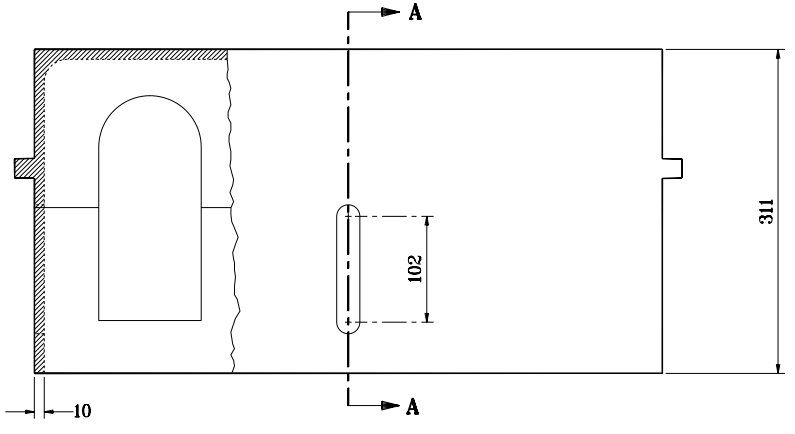

FRONT

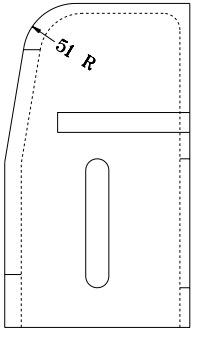

SIDE

All dimensions are in mm unless otherwise specified.

INDIANA DEPARTMENT OF TRANSPORTATION

CASTING TYPE 8
CURB BOX
SEPTEMBER 1998

STANDARD DRAWING NO. **720–ICCA–06**

ANTHONY L. UREMOVICH REGISTERED No. 18095 STATE OF INDIANA PROFESSIONAL ENGINEER

DESIGN STANDARDS ENGINEER

/s/ Anthony L. Uremovich 9–01–98
DESIGN STANDARDS ENGINEER DATE

/s/ Donald W. Lucas 9–01–98
CHIEF HIGHWAY ENGINEER DATE

Source Sheet: MC1