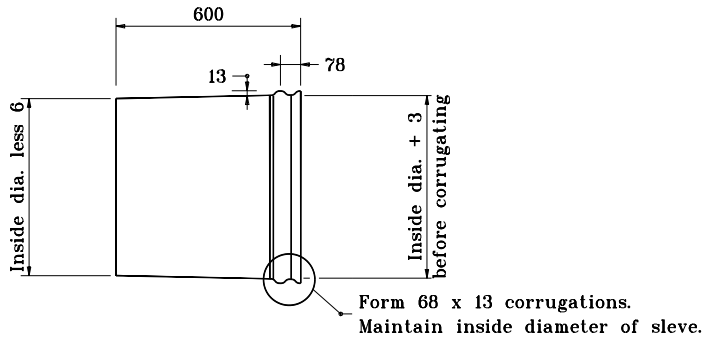

SMOOTH TAPERED SLEEVE DETAIL

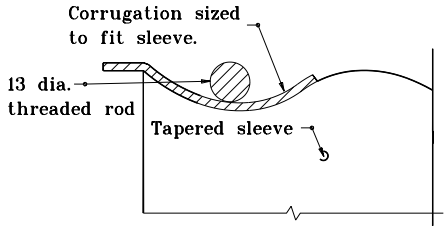

SECTION B–B

GENERAL NOTES

1. For circular pipe diameters through 600, attach end section to pipe with type 1 connector. For all other sizes, attach end section to pipe with type 2 connector.

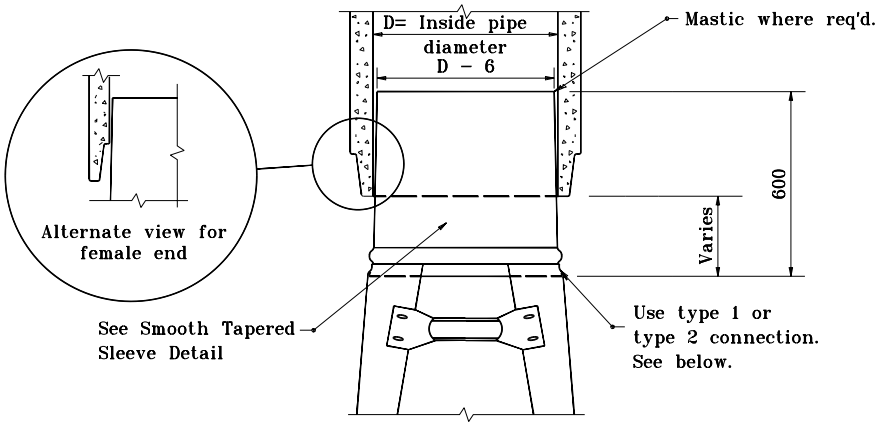

TAPERED SLEEVE FOR ATTACHING STEEL END SECTION TO SMOOTH INTERIOR PIPE

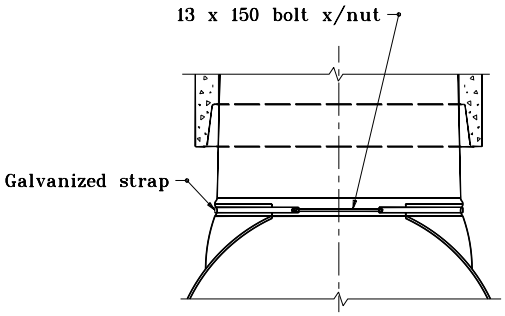

TYPE 1 CONNECTOR DETAIL

for all circular pipes through 600

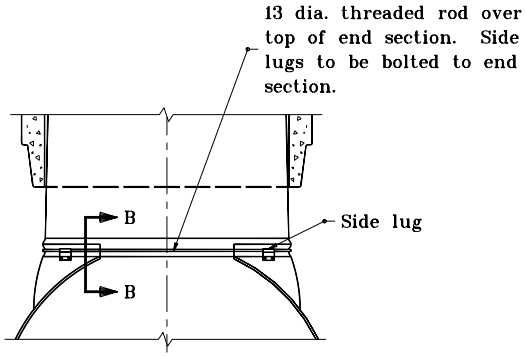

TYPE 2 CONNECTOR DETAIL

all circular pipes larger than 600 and all horizontal elliptical pipes

All dimensions are in mm unless otherwise specified.

INDIANA DEPARTMENT OF TRANSPORTATION

SAFETY METAL CULVERT END SECTIONS FOR SMOOTH PIPE

JANUARY 1998

STANDARD DRAWING NO. **715–SMES–08**

ANTHONY L. UREMOVICH REGISTERED No. 18095 STATE OF INDIANA PROFESSIONAL ENGINEER

DESIGN STANDARDS ENGINEER

/s/ Anthony L. Uremovich 1-02-98
DESIGN STANDARDS ENGINEER — DATE

/s/ Donald W. Lucas 1-02-98
CHIEF HIGHWAY ENGINEER — DATE

Source Sheet: SMES3