GENERAL NOTES

1. Toe plate extension shall be the same thickness as the end section. Dimension shall be overall width less 150.
2. Transverse safety bars shall be Schedule 40 galvanized steel pipe. Pipe shall be galvanized after forming. Number of bars required will vary depending on the length of the end sections.
3. Slotted holes for safety bar attachment shall be provided for all end sections.
4. See Standard Drawing 715-SMES-04 for Section A-A.
5. See Standard Drawing 715-SMES-06 for variable dimensions.
6. See Standard Drawing 715-SMES-01 for warrant of longitudinal saftey bar.

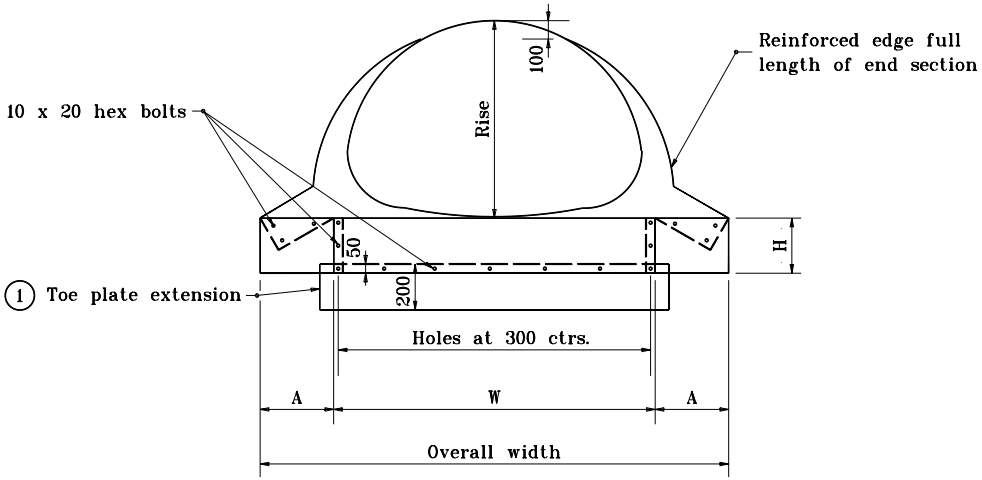

FRONT VIEW

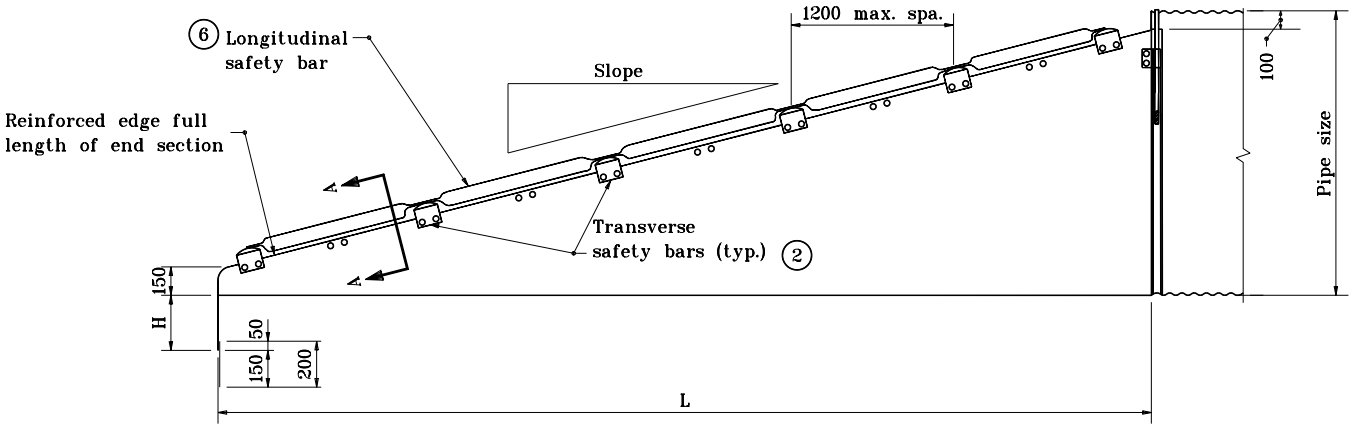

SIDE ELEVATION FOR CROSS STRUCTURE END SECTION

All dimensions are in mm unless otherwise specified.

INDIANA DEPARTMENT OF TRANSPORTATION

SAFETY METAL CULVERT END SECTIONS FOR CORRUGATED PIPE

JANUARY 1998

STANDARD DRAWING NO. **715-SMES-05**

ANTHONY L. UREMOVICH REGISTERED No. 18095 STATE OF INDIANA PROFESSIONAL ENGINEER

DESIGN STANDARDS ENGINEER

/s/ Anthony L. Uremovich 1-02-98
DESIGN STANDARDS ENGINEER DATE

/s/ Donald W. Lucas 1-02-98
CHIEF HIGHWAY ENGINEER DATE

Source Sheet: SMES2