PIPE-ARCH DIMENSIONS		END SECTION THICK.	DIMENSIONS					APPROX. SLOPE	BODY
			A	B	H	L	W		
SPAN	RISE		(±25)	(Max.)	(±25)	(±40)	(±50)		
430	330	1.63	180	230	150	480	760	2.5 : 1	1 Pc.
530	380	1.63	180	250	150	580	910	2.5 : 1	1 Pc.
610	460	1.63	200	310	150	710	1070	2.5 : 1	1 Pc.
710	510	1.63	230	360	150	810	1220	2.5 : 1	1 Pc.
885	610	2.01	250	410	200	990	1520	2.5 : 1	1 Pc.
1060	740	2.01	310	460	230	1170	1910	2.5 : 1	1 Pc.

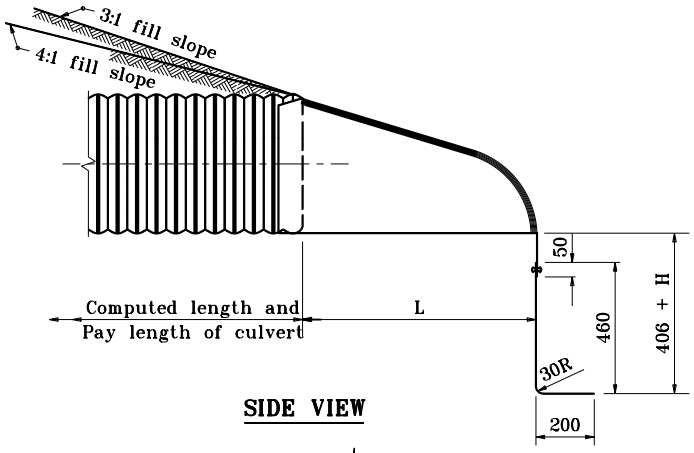

SIDE VIEW

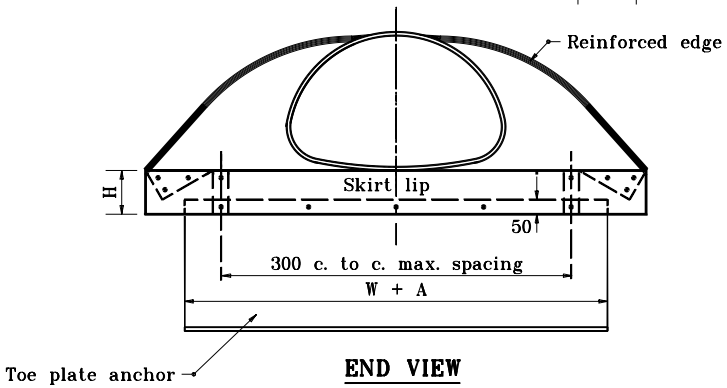

END VIEW

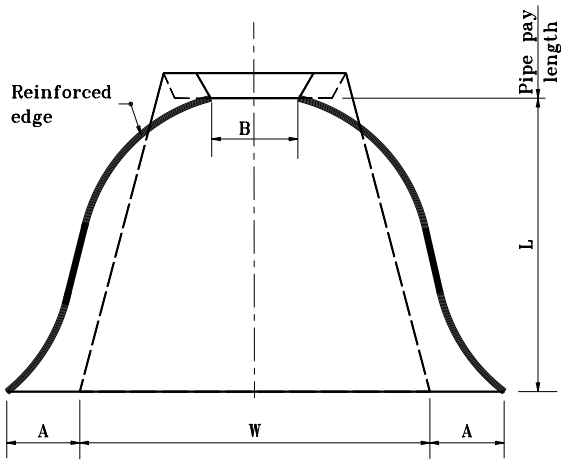

PLAN VIEW

All dimensions are in mm unless otherwise specified.

INDIANA DEPARTMENT OF TRANSPORTATION

METAL PIPE ARCH END SECTION

JANUARY 1998

STANDARD DRAWING NO. **715-MPES-02**

ANTHONY L. UREMOVICH REGISTERED No. 18095 STATE OF INDIANA PROFESSIONAL ENGINEER

/s/ Anthony L. Uremovich 1-02-98
DESIGN STANDARDS ENGINEER DATE

/s/ Donald W. Lucas 1-02-98
CHIEF HIGHWAY ENGINEER DATE

DESIGN STANDARDS ENGINEER

Source Sheet: ME2