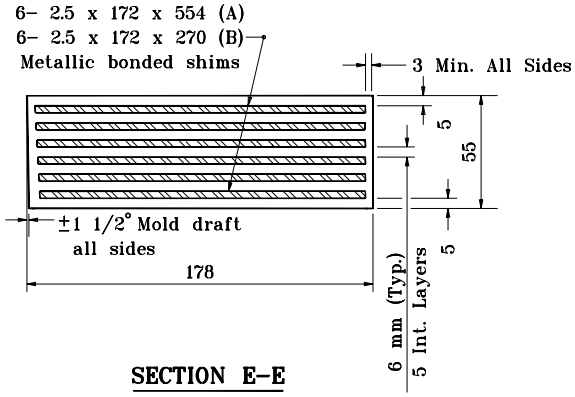

SECTION E–E
TYPE 5

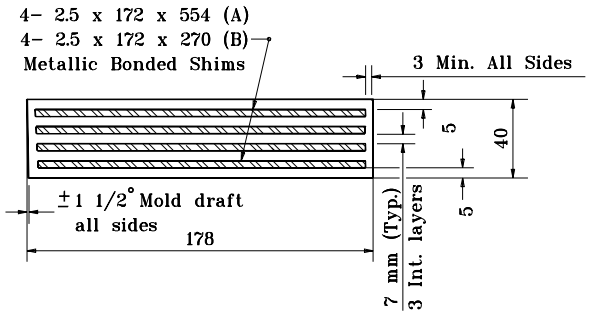

SECTION E–E
TYPE 6

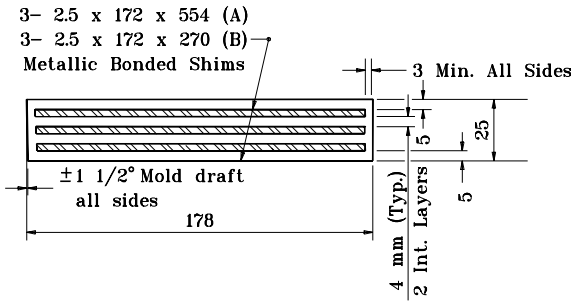

SECTION E–E
TYPE 7

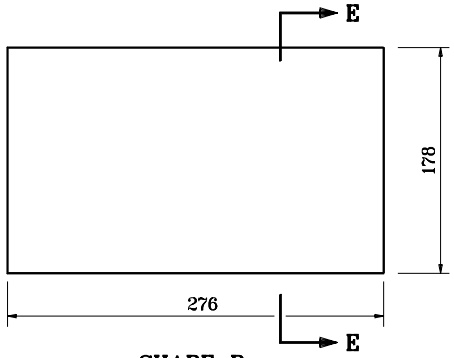

SHAPE B
TYPE 5B, 6B, & 7B

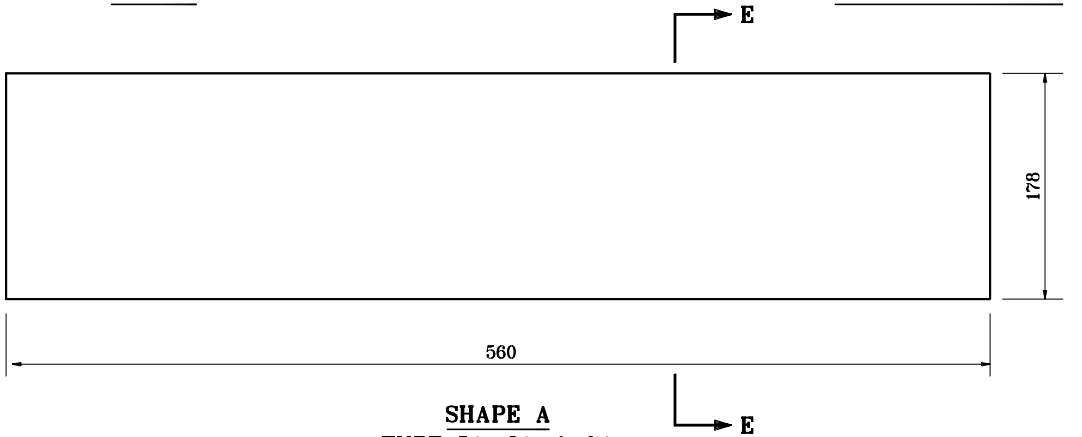

SHAPE A
TYPE 5A, 6A, & 7A

GENERAL NOTES

1. Material: 55 (±5) durometer elastomer. Pads Type 5, 6, & 7 (shapes A & B) are to be used with prestressed box beams. Select type by suitable design. Use shape A under adjacent box beams and shape B under outside edge of exterior box beam. Pads to be designated as Type 5A, 5B, etc.

2. The proper pad type to be used with spread box beams shall be determined by design.

All dimensions are in mm unless otherwise specified.

INDIANA DEPARTMENT OF TRANSPORTATION

ELASTOMERIC BEARING PADS

JANUARY 1995

STANDARD DRAWING NO. **707–BEBP–03**

ANTHONY L. UREMOVICH REGISTERED No. 18095 STATE OF INDIANA PROFESSIONAL ENGINEER

DESIGN STANDARDS ENGINEER

/s/ Anthony L. Uremovich 1–03–95
DESIGN STANDARDS ENGINEER DATE

/s/ Donald W. Lucas 1–03–95
CHIEF HIGHWAY ENGINEER DATE

Source Sheet: PB–11