NOTES:

1. See Standard Drawing 706-TASE-05 for General Notes.

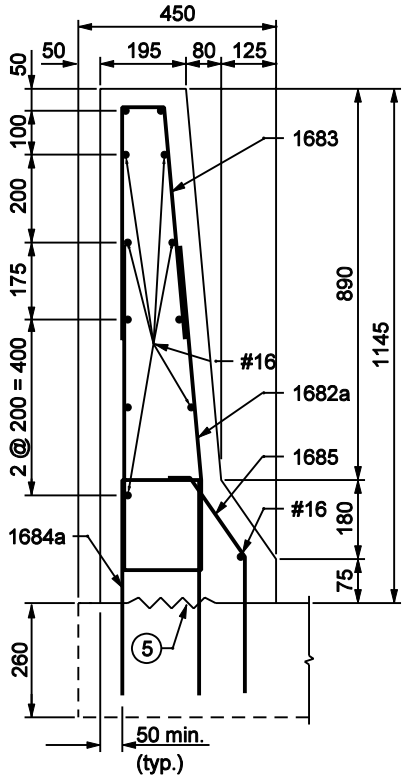


SECTION A-A

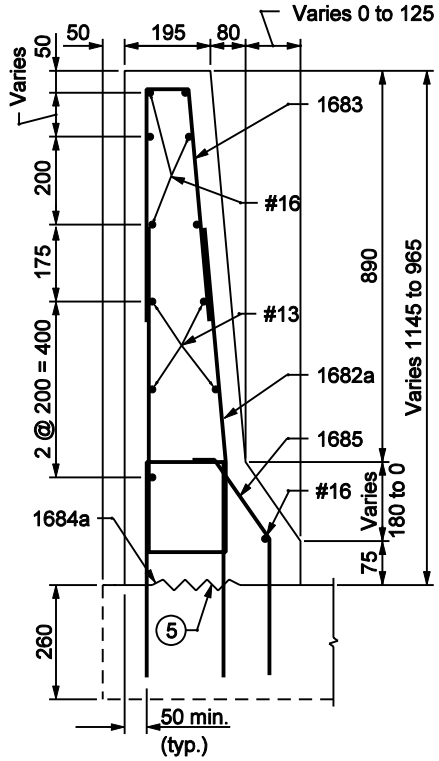


SECTION B-B

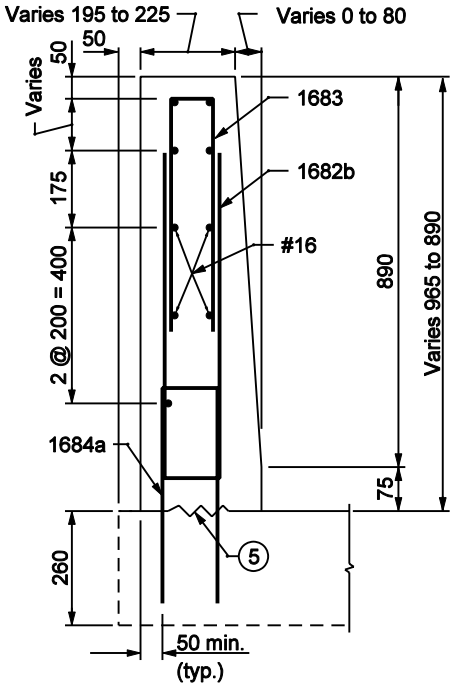


SECTION C-C

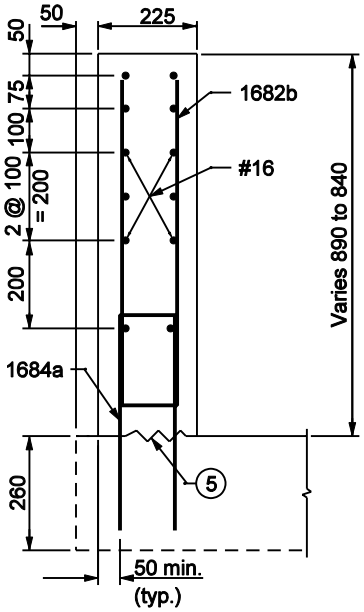


SECTION D-D

All Dimension are in mm unless otherwise specfied

INDIANA DEPARTMENT OF TRANSPORTATION

CONCRETE BRIDGE RAILING
TRANSITION TYPE TBT

MARCH 2003

STANDARD DRAWING NO. 706-TTBT-02

1145 TRUCK HEIGHT THRIE BEAM/
CONCRETE BRIDGE RAILING TRANSITION

RICHARD L. VanCLEAVE
REGISTERED
No. 9750
STATE OF INDIANA
PROFESSIONAL ENGINEER

DESIGN STANDARDS ENGINEER

/s/ Richard L. VanCleave 3-03-03
DESIGN STANDARDS ENGINEER DATE

/s/ Richard K. Smutzer 3-03-03
CHIEF HIGHWAY ENGINEER DATE