NOTES

1. All reinforcing bars designated "E" shall be epoxy coated.

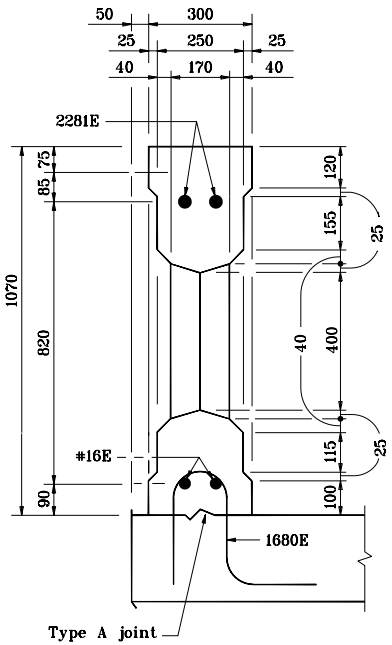

SECTION A–A

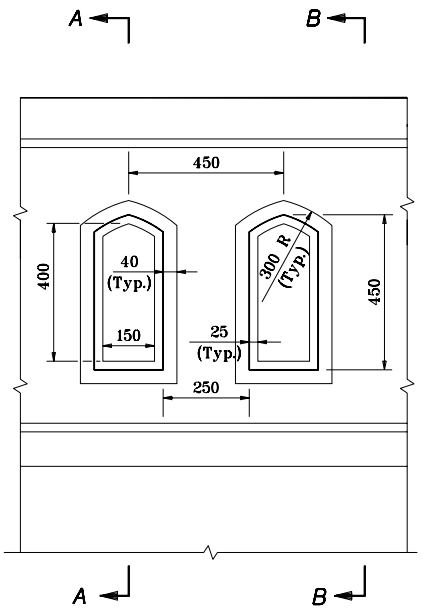

ELEVATION

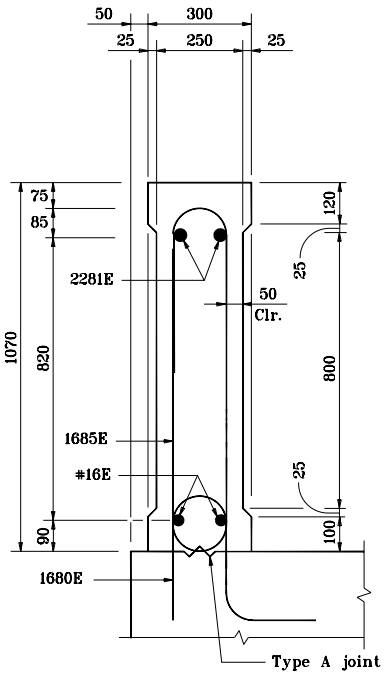

SECTION B–B

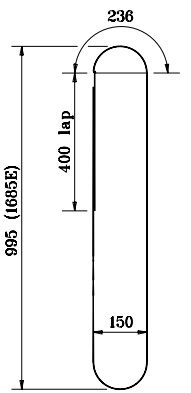

1685E x 2562

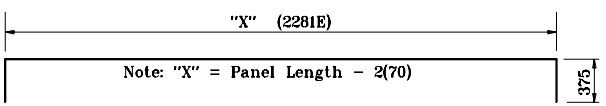

2281E x "X" + 750

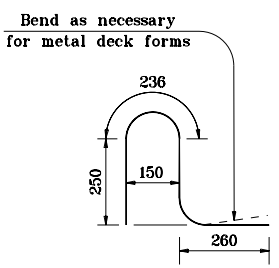

1680E x 963

All dimensions are in mm unless otherwise specified.

INDIANA DEPARTMENT OF TRANSPORTATION

RAILING, TX
(WINDOW DETAILS)

MAY 2000

STANDARD DRAWING NO. **706–BRTX–03**

ANTHONY L. UREMOVICH REGISTERED No. 18095 STATE OF INDIANA PROFESSIONAL ENGINEER

DESIGN STANDARDS ENGINEER

/s/ Anthony L. Uremovich 5–01–00
DESIGN STANDARDS ENGINEER DATE

/s/ Firooz Zandi 5–01–00
CHIEF HIGHWAY ENGINEER DATE