GENERAL NOTES

1. Fit grate to box in shop and ship in place.
2. This grate is used with Roadway Drain Type OS and weighs approximately 36.3 kg.

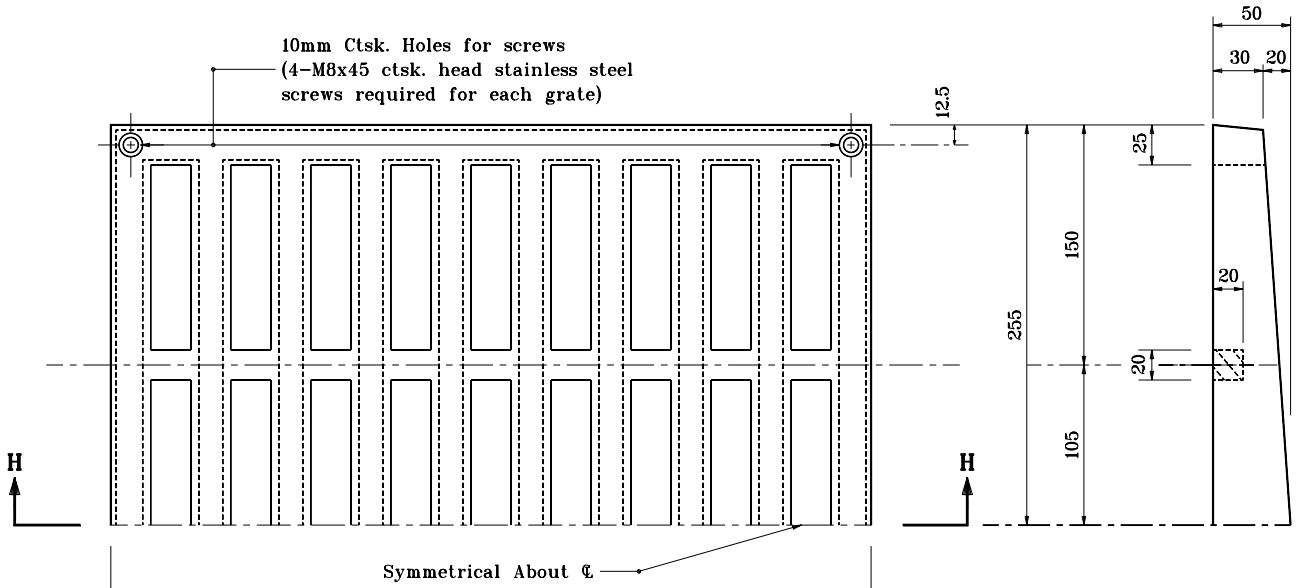

HALF PLAN

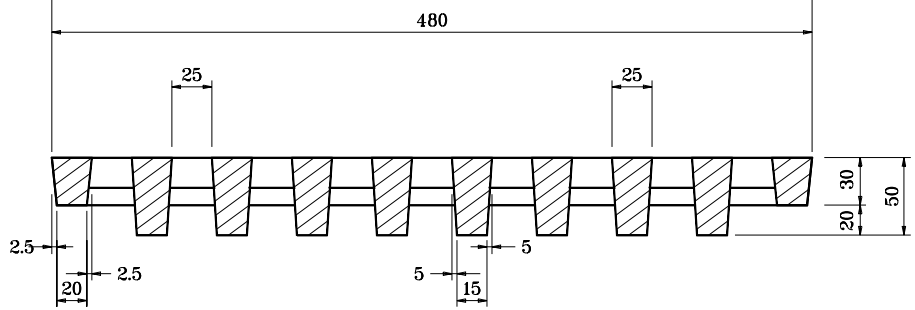

SECTION H-H

All dimensions are in mm unless otherwise specified.

INDIANA DEPARTMENT OF TRANSPORTATION

CASTING DETAILS
GRATE D

SEPTEMBER 1994

STANDARD DRAWING NO. **704-BDCG-02**

ANTHONY L. UREMOVICH REGISTERED No. 18095 STATE OF INDIANA PROFESSIONAL ENGINEER

/s/ Anthony L. Uremovich 9-30-94
DESIGN STANDARDS ENGINEER DATE

/s/ Donald W. Lucas 9-30-94
CHIEF HIGHWAY ENGINEER DATE

DESIGN STANDARDS ENGINEER

Source Sheet: D