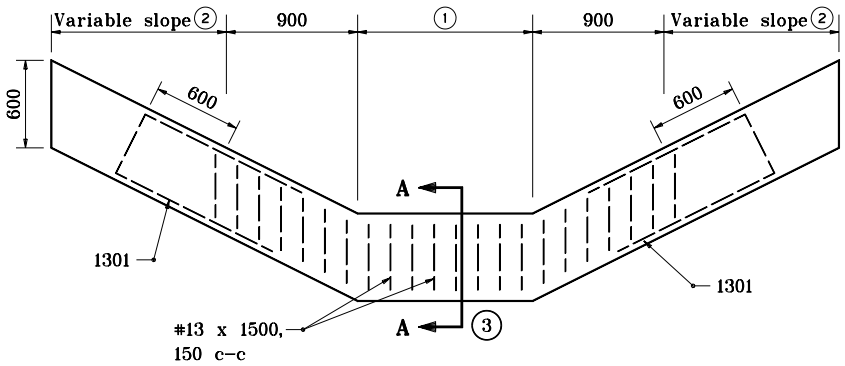

ELEVATION VIEW

CUT-OFF WALL FOR PAVED SIDE DITCH TYPES E THROUGH H

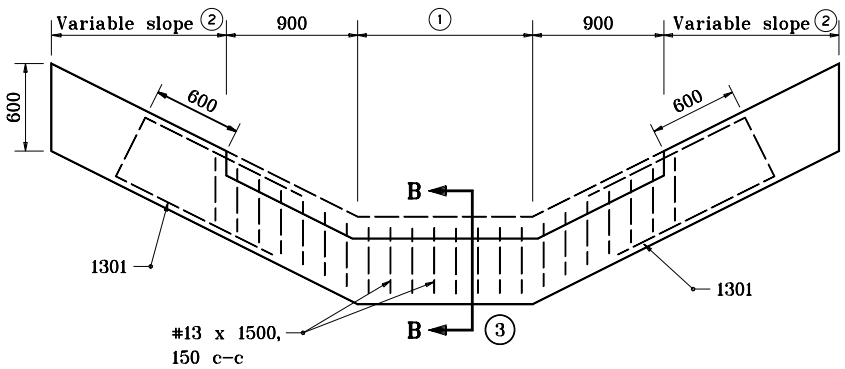

ELEVATION VIEW

LUG FOR PAVED SIDE DITCH TYPES E THROUGH H

GENERAL NOTES

① 300 For Type E
600 For Type F
900 For Type G
1200 For Type H

② 900 For Type E & F
1200 For Type G & H

③ See Standard Drawing 607-PSDT-02 for Sections A-A and B-B.

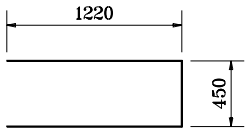

1301 x 3000

All dimensions are in mm unless otherwise specified.

INDIANA DEPARTMENT OF TRANSPORTATION

PAVED SIDE DITCH
CUT-OFF WALL AND LUG

SEPTEMBER 1997

STANDARD DRAWING NO. **607-PSDT-03**

ANTHONY L. UREMOVICH REGISTERED No. 18095 STATE OF INDIANA PROFESSIONAL ENGINEER

/s/ Anthony L. Uremovich 9-01-97
DESIGN STANDARDS ENGINEER DATE

/s/ Donald W. Lucas 9-01-97
CHIEF HIGHWAY ENGINEER DATE

DESIGN STANDARDS ENGINEER

Source Sheet: MB