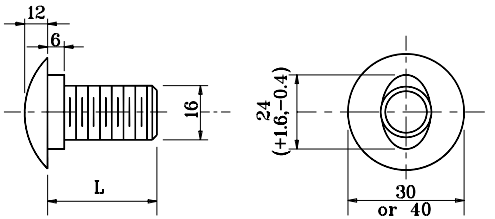

M16 BUTTON HEAD BOLT

L	THREAD LENGTH
30	Full Length Thread
50	40 Min. Thread Length
240	45 Min. Thread Length
460	60 Min. Thread Length
640	50 Min. Thread Length

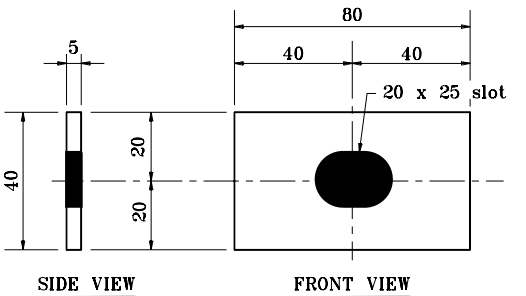

RECTANGULAR PLATE WASHER

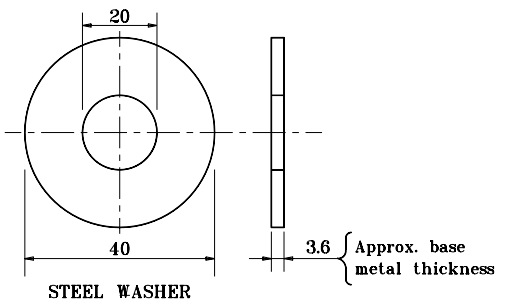

WASHER FOR M16 BOLT

All dimensions are in mm unless otherwise specified.

INDIANA DEPARTMENT OF TRANSPORTATION

W-BEAM
GUARDRAIL COMPONENTS
MAY 2000

STANDARD DRAWING NO. **601-WBGC-02**

ANTHONY L. UREMOVICH REGISTERED No. 18095 STATE OF INDIANA PROFESSIONAL ENGINEER

DESIGN STANDARDS ENGINEER

/s/ Anthony L. Uremovich 5-01-00
DESIGN STANDARDS ENGINEER DATE

/s/ Firooz Zandi 5-01-00
CHIEF HIGHWAY ENGINEER DATE