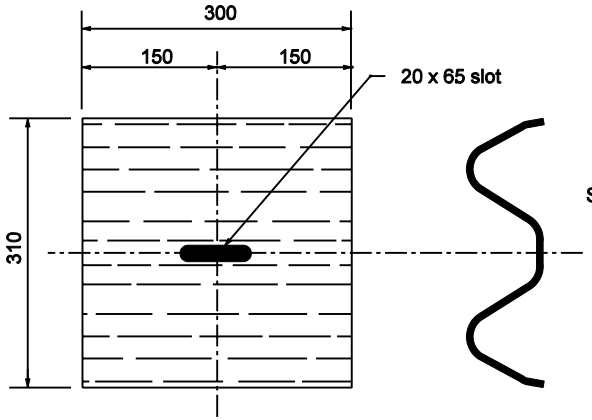

W-BEAM BACKUP PLATE

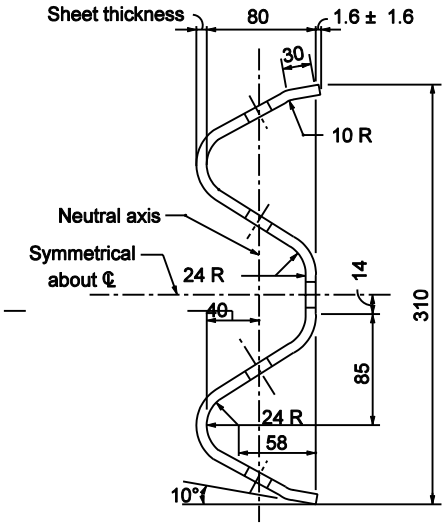

SECTION THROUGH BEAM ELEMENT

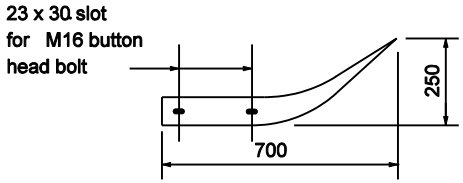

TOP VIEW

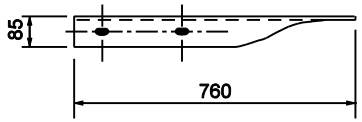

TOP VIEW

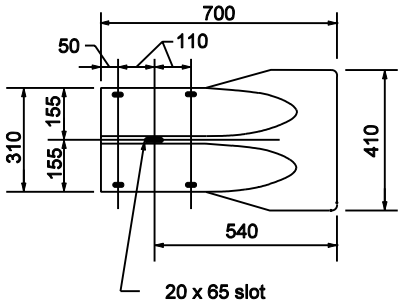

FRONT VIEW

CURVED TERMINAL END

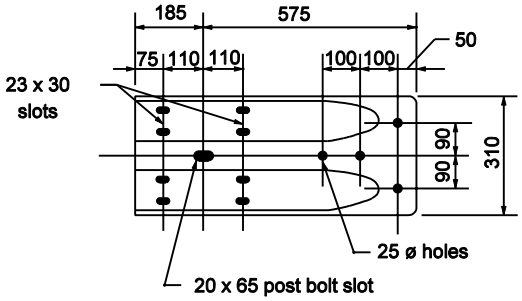

FRONT VIEW

W-BEAM TERMINAL CONNECTOR

GENERAL NOTES

1. This sheet shall be used when W-beam guardrail is specified. This sheet shall also be used when a W-beam guardrail system requires the use of standard W-beam guardrail components.
2. The details on ths sheet are for the standard components of W-beam guardrail.

All Dimension are in mm unless otherwise specfied

INDIANA DEPARTMENT OF TRANSPORTATION

W-BEAM
GUARDRAIL COMPONENTS

MARCH 2003

STANDARD DRAWING NO. 601-WBGC-01

RICHARD L. VanCLEAVE REGISTERED No. 9750 STATE OF INDIANA PROFESSIONAL ENGINEER

DESIGN STANDARDS ENGINEER

/s/ Richard L. VanCleave 3-03-03
DESIGN STANDARDS ENGINEER DATE

/s/ Richard K. Smutzer 3-03-03
CHIEF HIGHWAY ENGINEER DATE