GENERAL NOTES

1. Pavement contraction joints shall be extended through the concrete shoulder in the gore areas.

(2) Shoulder corrugations shall be omitted in this area.

(3) Any required additional length of L above the 185 m minimum shall be added to the length of this parallel lane segment. (Example: required L = 220 m then this parallel lane segment length = 125 m)

4. See tables on Standard Drawing 401-REBS-04.

5. See Standard Drawing 401-REBS-03 for Section B-B.

CURVE DATA

△ = 3° 00′ 00″
R = 875.000 m
T = 22.867 m
L = 45.720 m
E = 0.299 m

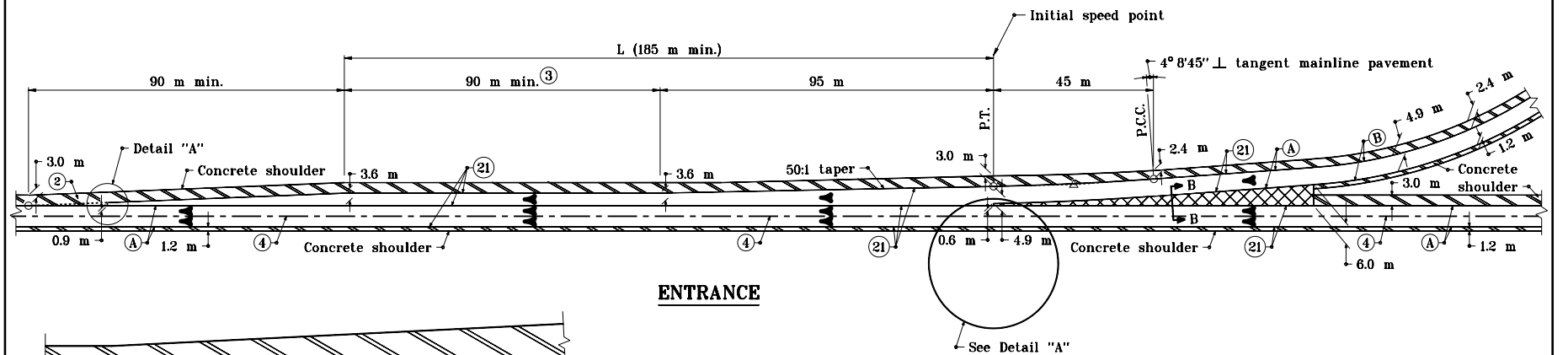

ENTRANCE

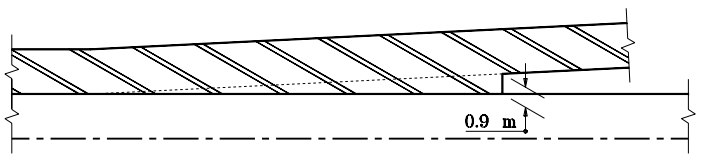

DETAIL "A"

LEGEND

(A) Pavement type and thickness as specified for the mainline.
(B) Pavement type and thickness as specified for ramps.
(4) Longitudinal joint
(21) Longitudinal construction joint
Concrete shoulder (Thickness of mainline pavement)
Concrete shoulder (Thickness as specified on Typical Sections)

All dimensions are in mm unless otherwise specified.

INDIANA DEPARTMENT OF TRANSPORTATION

RAMP ENTRANCE TERMINAL CONCRETE SHOULDER

SEPTEMBER 2000

STANDARD DRAWING NO. **501-RECS-01**

ANTHONY L. UREMOVICH REGISTERED No. 18095 STATE OF INDIANA PROFESSIONAL ENGINEER

DESIGN STANDARDS ENGINEER

/s/ Anthony L. Uremovich 9-01-00
DESIGN STANDARDS ENGINEER — DATE

/s/ Firooz Zandi 9-01-00
CHIEF HIGHWAY ENGINEER — DATE