GENERAL NOTES

1. Ear construction type A:
   2 lines of #16 bars required (Est. mass = 39 kg). Transverse sawed and sealed joint, in line with pavement contraction joint, shall extend through ear construction. The #16 bars shall be discontinued at such joints. See Detail B–B on Standard Drawing 401–REBS–01.

2. See Standard Drawing 401–REBS–03 for Section A–A.

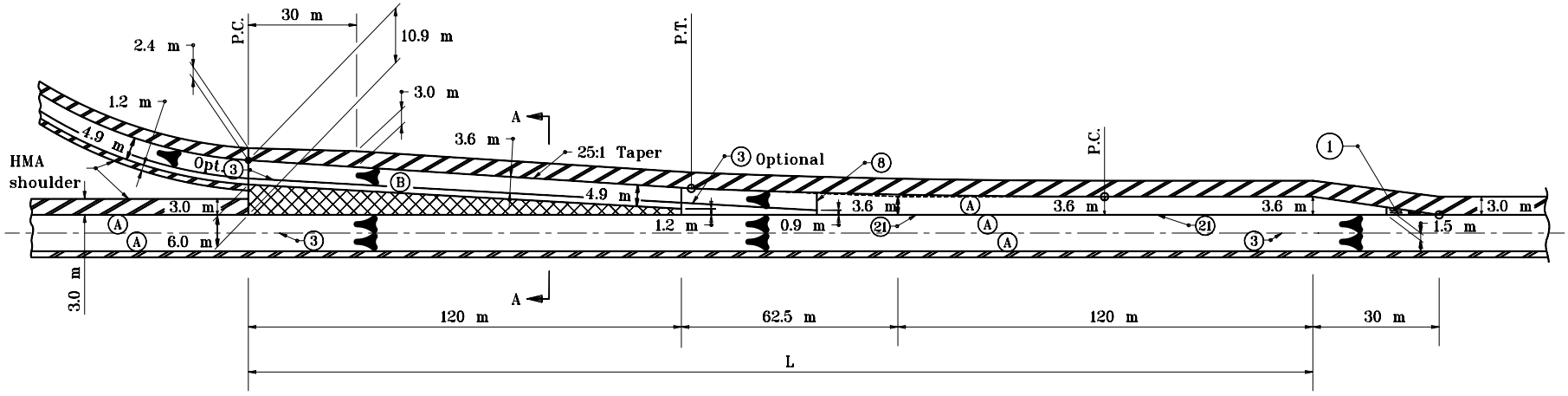

EXIT

LEGEND

- (A) Pavement type and thickness as specified for the mainline.
- (B) Pavement type and thickness as specified for ramps.
- (3) Longitudinal Joint (Optional where indicated)
- (21) Longitudinal Construction Joint
- HMA Shoulder (Thickness of mainline pavement)
- HMA Shoulder (Thickness as specified on Typical Sections)

CURVE DATA

Δ = 2° 17′ 26″
T = 58.189 m
L = 116.360 m
E = 0.582 m
R = 2910.627 m

All dimensions are in mm unless otherwise specified.

INDIANA DEPARTMENT OF TRANSPORTATION

RAMP EXIT TERMINAL
HMA SHOULDER
JANUARY 1999

STANDARD DRAWING NO. **401–REBS–02**

ANTHONY L. UREMOVICH REGISTERED No. 18095 STATE OF INDIANA PROFESSIONAL ENGINEER

/s/ Anthony L. Uremovich 1-04-99
DESIGN STANDARDS ENGINEER DATE

/s/ Donald W. Lucas 1-04-99
CHIEF HIGHWAY ENGINEER DATE

DESIGN STANDARDS ENGINEER

Source Sheet: MV4