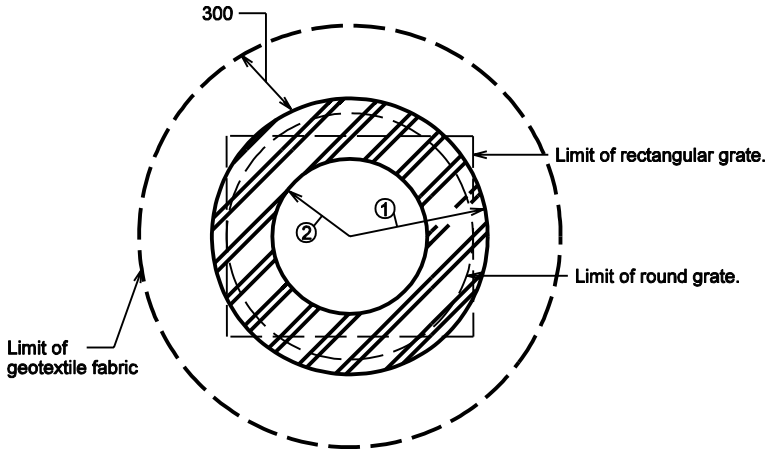

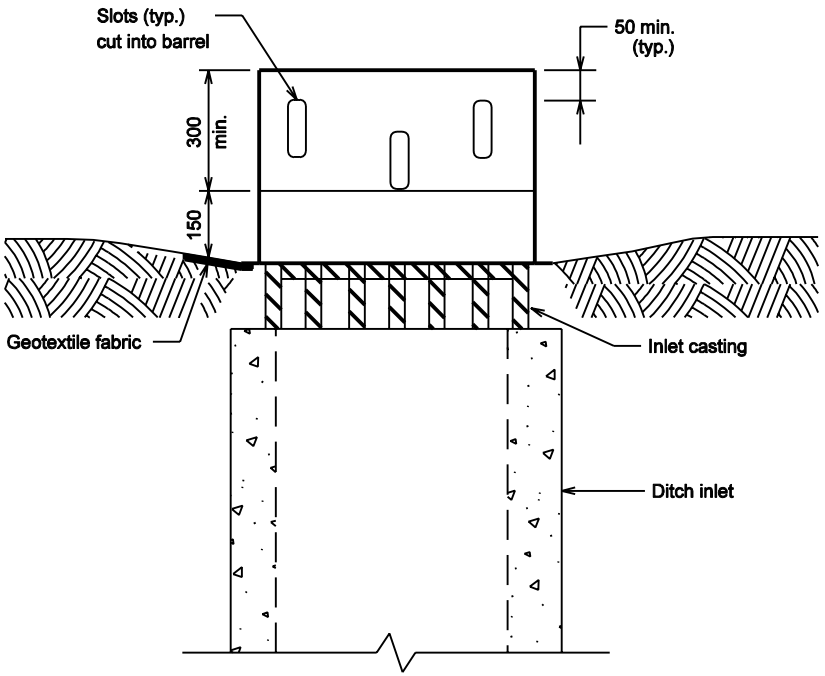

GENERAL NOTES

① Radius shall be equal to or greater than that of a round casting grate, or equal to, or greater than half of the longer length of a rectangular grate.

② Distance shall be greater than half of the radius of a round grate, or greater than one-quarter of the shorter length of a rectangular grate.

3 Slots shall be 125 min. height by 25 min. width.

All dimensions are in mm unless otherwise specfied.

INDIANA DEPARTMENT OF TRANSPORTATION

TEMPORARY DITCH INLET PROTECTION, SLOTTED BARREL

MARCH 2002

STANDARD DRAWING NO. 205-TECI-03

RICHARD L. VanCLEAVE REGISTERED No. 9750 STATE OF INDIANA PROFESSIONAL ENGINEER

DESIGN STANDARDS ENGINEER

/s/ Richard L. VanCleave 3-01-02
DESIGN STANDARDS ENGINEER DATE

/s/ Richard K. Smutzer 3-01-02
CHIEF HIGHWAY ENGINEER DATE