ITEM DESRIPTIONS

1. Hitch pin
2. 3/4" dia. reversible electric motor 120 V, 11.5 A, 350 RPM
3. Reversing drum switch
4. Control cord 20 ft. length
5. Wiring housing
6. Plug to mate to connector in pole base or transformer secondary
7. Torque limiter coupling
8. 3/4" dia. steel shaft
9. Ballbearing pillowblock
10. 5/8" hex socket crank shaft coupling
11. Connector to motor from 120 V transformer secondary
12. Stepdown trnsformer 120 V secondary, 1.5 kVA for 240 V, 277 V, & 480 V; 2.0 kVA for 208 V
13. 1/2" carry handle
14. Plug to connector in pole base from transformer primary
15. NEMA 4-circuit-breaker enclosure field mounted to pole handhole door
16. 1/2" dia. mounting bolt, 4 req'd.
17. 0.25 in. thick steel winch plate zinc electroplate finish
18. Power unit mounting bracket, 0.25 in. thick steel zinc electroplate finish
19. 5 ft. power supply cord and connector
20. Winch 30:1 gear ratio internal drag brake
21. 5/16" dia. 7 x 19 wire rope. Length is pole height + 6 ft. stainless steel
22. Forged steel swivel, 11,000 psi ultimate strength
23. Cord grip
24. Winch cable guard
25. Winch outboard support

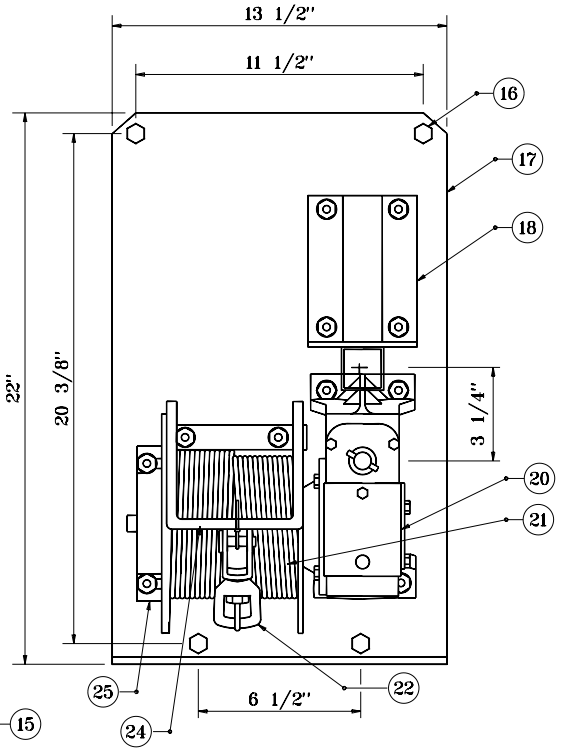

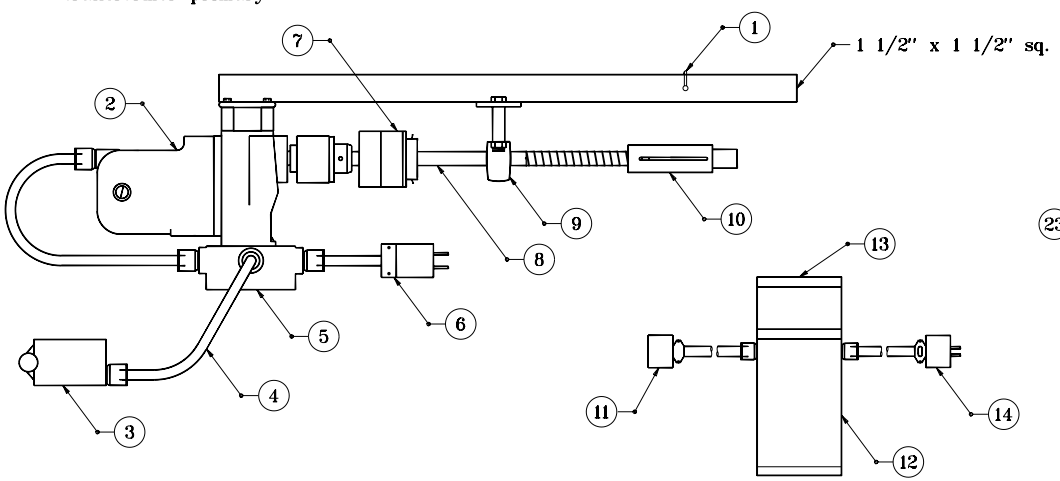

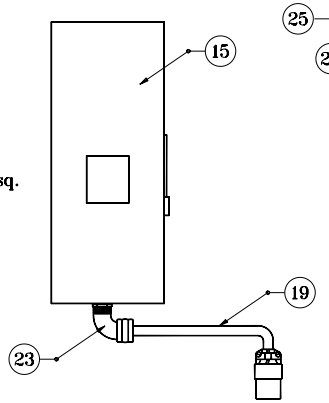

INDIANA DEPARTMENT OF TRANSPORTATION

HIGHWAY ILLUMINATION TOWER DETAILS - BOTTOM LATCH

JANUARY 1999

STANDARD DRAWING NO E 807-LTHI-03A

ANTHONY L. UREMOVICH REGISTERED No. 18095 STATE OF INDIANA PROFESSIONAL ENGINEER

/s/ Anthony L. Uremovich 1-04-99
DESIGN STANDARDS ENGINEER DATE

/s/ Donald W. Lucas 1-04-99
CHIEF HIGHWAY ENGINEER DATE

DESIGN STANDARDS ENGINEER

Source Sheet: None