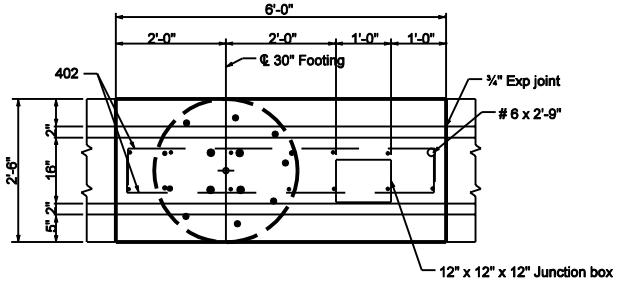

PLAN

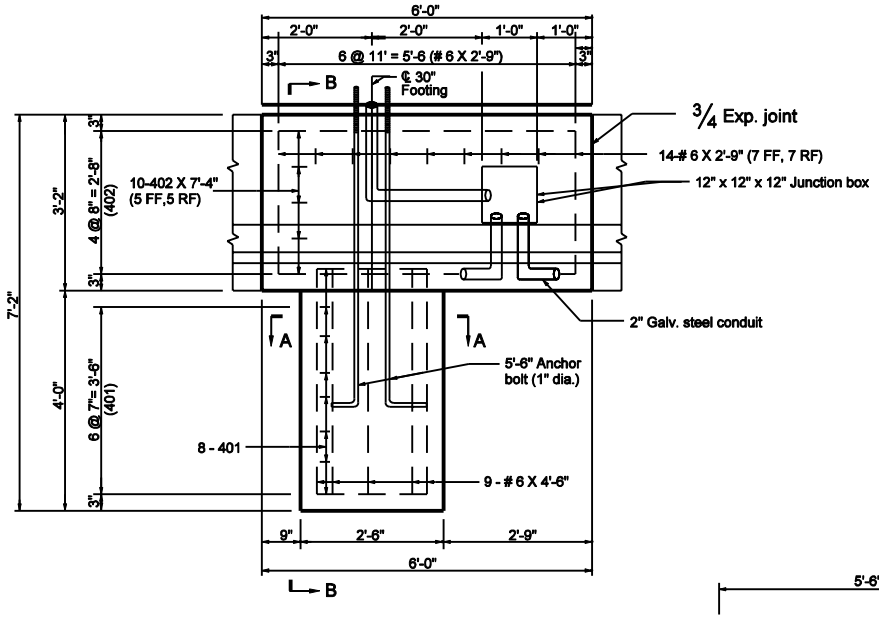

ELEVATION

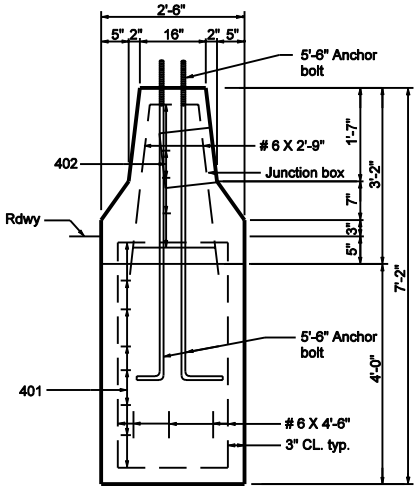

SECTION B-B

Notes:

1. 2" galvanized steel conduit and junction box can be installed in the median shoulder, the juncton box must be in front of the light foundation.
2. Junction box shall meet the following specifications:
   a. Material: Polymer concrete
   b. Color: Concrete gray
   c. Cover rating: 20,000 lbs.
3. Field cut rebar to accomodate juncton box

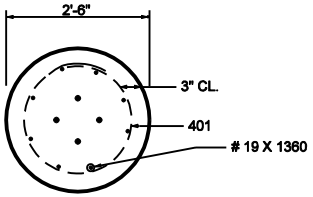

SECTION A-A

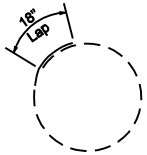

401 X 7'-9"

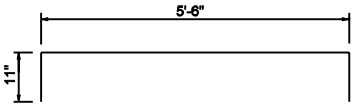

402 X 7'-4"

INDIANA DEPARTMENT OF TRANSPORTATION

CONVENTIONAL LIGHT FOUNDATION FOR 33" CONCRETE MEDIAN WALL INSTALLATION.

SEPTEMBER 2002

STANDARD DRAWING NO. E 807-LTFD-09

RICHARD L. VanCLEAVE REGISTERED No. 9750 STATE OF INDIANA PROFESSIONAL ENGINEER

DESIGN STANDARDS ENGINEER

/s/ Richard L. VanCleave 9-03-02
DESIGN STANDARDS ENGINEER DATE

/s/ Richard K. Smutzer 9-03-02
CHIEF HIGHWAY ENGINEER DATE