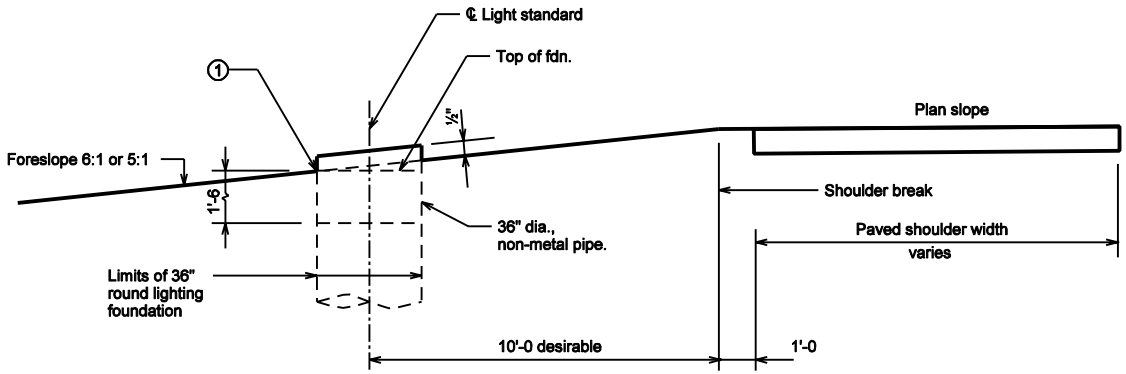

ELEVATION, FILL SECTION, 6:1 OR 5:1 SLOPE, ROUND FOUNDATION

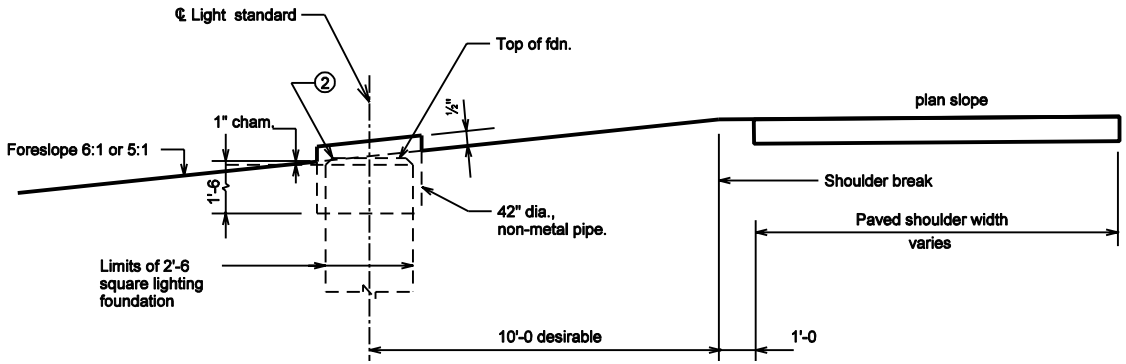

ELEVATION, FILL SECTION, 6:1 OR 5:1 SLOPE, SQUARE FOUNDATION

Notes:

① ② See Standard Drawing E 807-LTFD-05 General Notes.

3. Transformer base door shall face the right-of-way line.

INDIANA DEPARTMENT OF TRANSPORTATION

LIGHT STANDARD
FOUNDATION GRADING

SEPTEMBER 2002

STANDARD DRAWING NO. E 807-LTFD-02

REGISTERED RICHARD L. VanCLEAVE No. 9750 STATE OF INDIANA PROFESSIONAL ENGINEER

DESIGN STANDARDS ENGINEER

/s/ Richard L. VanCleave 9-03-02
DESIGN STANDARDS ENGINEER DATE

/s/ Richard K. Smulzer 9-03-02
CHIEF HIGHWAY ENGINEER DATE