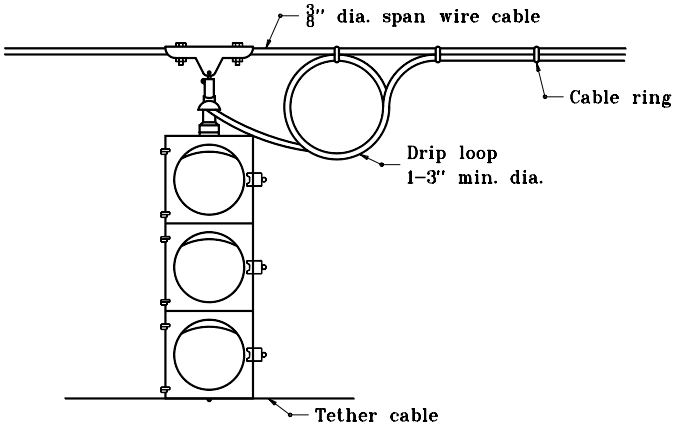

SPAN-HEAD ATTACHMENT

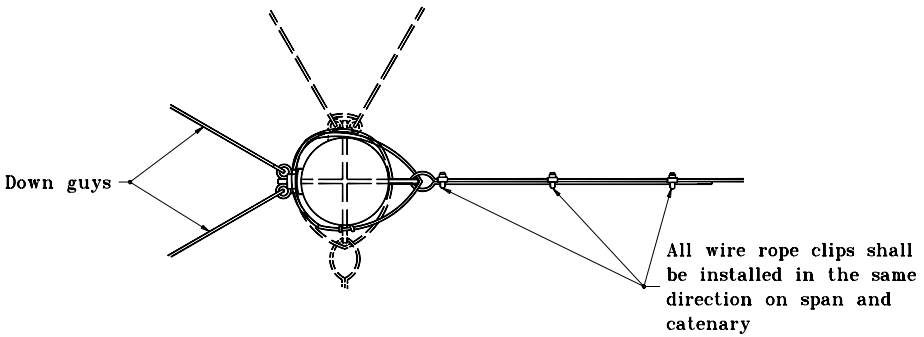

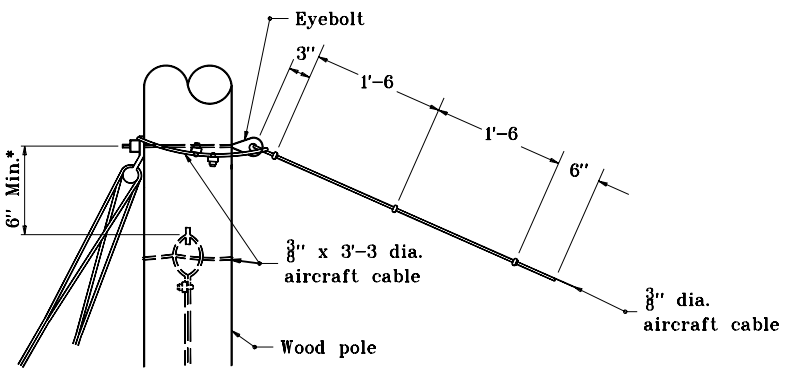

SAFETY CABLE AND EYE BOLT DETAIL

* If more than one catenary is attached to pole

GENERAL NOTES

1. Installation is the same for steel strain poles except pole bands will be used.
2. Aircraft cable shall use a heavy closed wire rope thimble at contact with pole bands.

INDIANA DEPARTMENT OF TRANSPORTATION

CABLE SPAN ATTACHMENT

SEPTEMBER 1998

STANDARD DRAWING NO. **E 805-SGSC-03**

ANTHONY L. UREMOVICH REGISTERED No. 18095 STATE OF INDIANA PROFESSIONAL ENGINEER

DESIGN STANDARDS ENGINEER

DETAILS PLACED IN THIS FORMAT	11-15-99
/s/ Anthony L. Uremovich DESIGN STANDARDS ENGINEER	11-15-99 DATE
/s/ Firooz Zandi CHIEF HIGHWAY ENGINEER	11-15-99 DATE
ORIGINALLY APPROVED	9-01-98