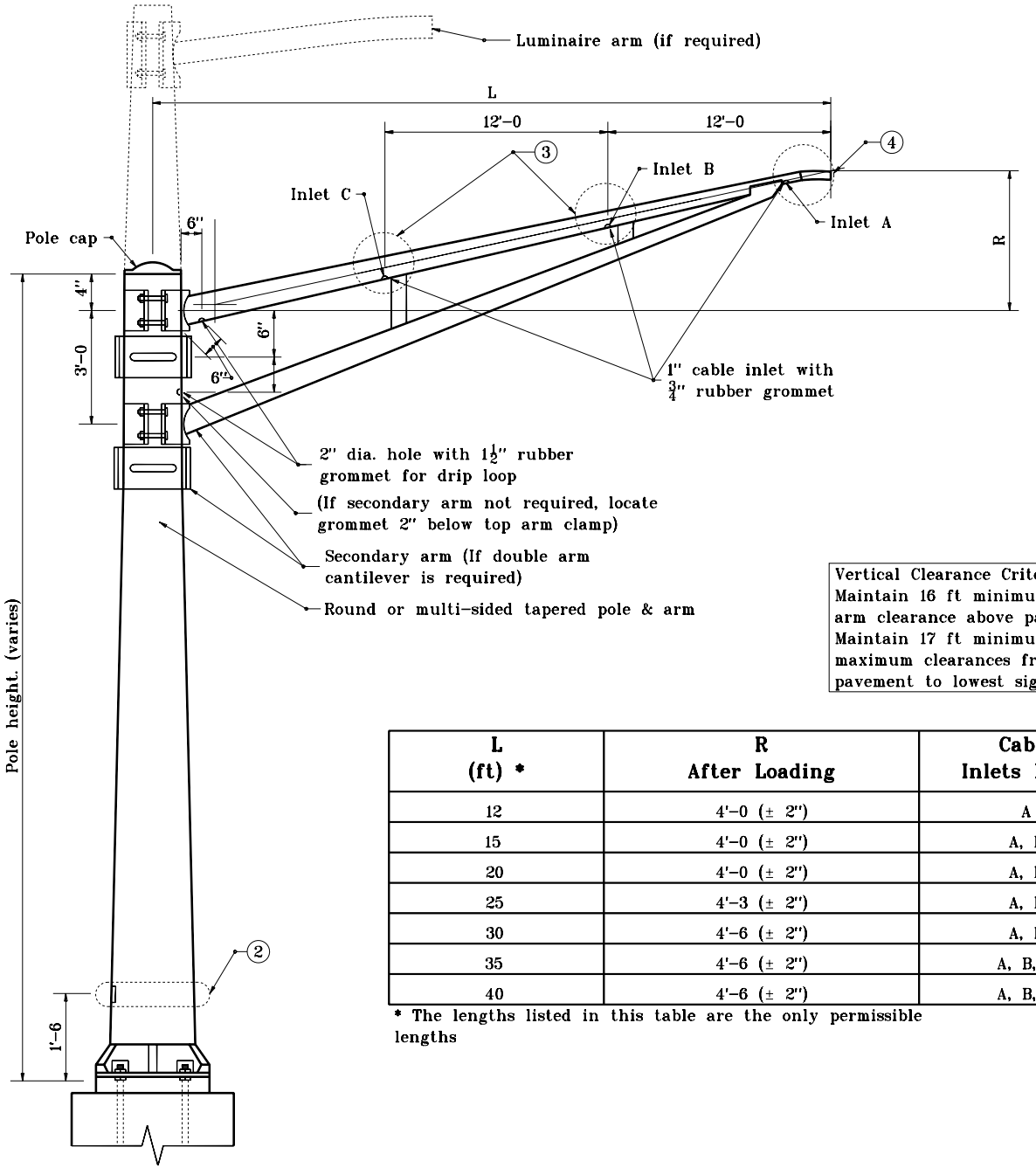

GENERAL NOTES

1. The upper 4 ft to 6 ft of the pole may be non-tapered.

(2) See Standard Drawing E 805-SGMA-04 for Detail B.

(3) See Standard Drawing E 805-SGMA-04 for Detail C.

(4) See Standard Drawing E 805-SGMA-04 for Detail D.

Vertical Clearance Criteria:
Maintain 16 ft minimum mast arm clearance above pavement.
Maintain 17 ft minimum and 19 ft maximum clearances from top of pavement to lowest signal head.

L (ft) *	R After Loading	Cable Inlets Req'd.
12	4'-0 (± 2")	A
15	4'-0 (± 2")	A, B
20	4'-0 (± 2")	A, B
25	4'-3 (± 2")	A, B
30	4'-6 (± 2")	A, B
35	4'-6 (± 2")	A, B, C
40	4'-6 (± 2")	A, B, C

* The lengths listed in this table are the only permissible lengths

INDIANA DEPARTMENT OF TRANSPORTATION

SIGNAL CANTILEVER ARM TRUSS TYPE ARM

MAY 1998

STANDARD DRAWING NO. E 805-SGMA-02

ANTHONY L. UREMOVICH REGISTERED No. 18095 STATE OF INDIANA PROFESSIONAL ENGINEER

DESIGN STANDARDS ENGINEER

DETAILS PLACED IN THIS FORMAT 11-15-99

/s/ Anthony L. Uremovich 11-15-99
DESIGN STANDARDS ENGINEER DATE

/s/ Firooz Zandi 11-15-99
CHIEF HIGHWAY ENGINEER DATE

ORIGINALLY APPROVED 5-01-98