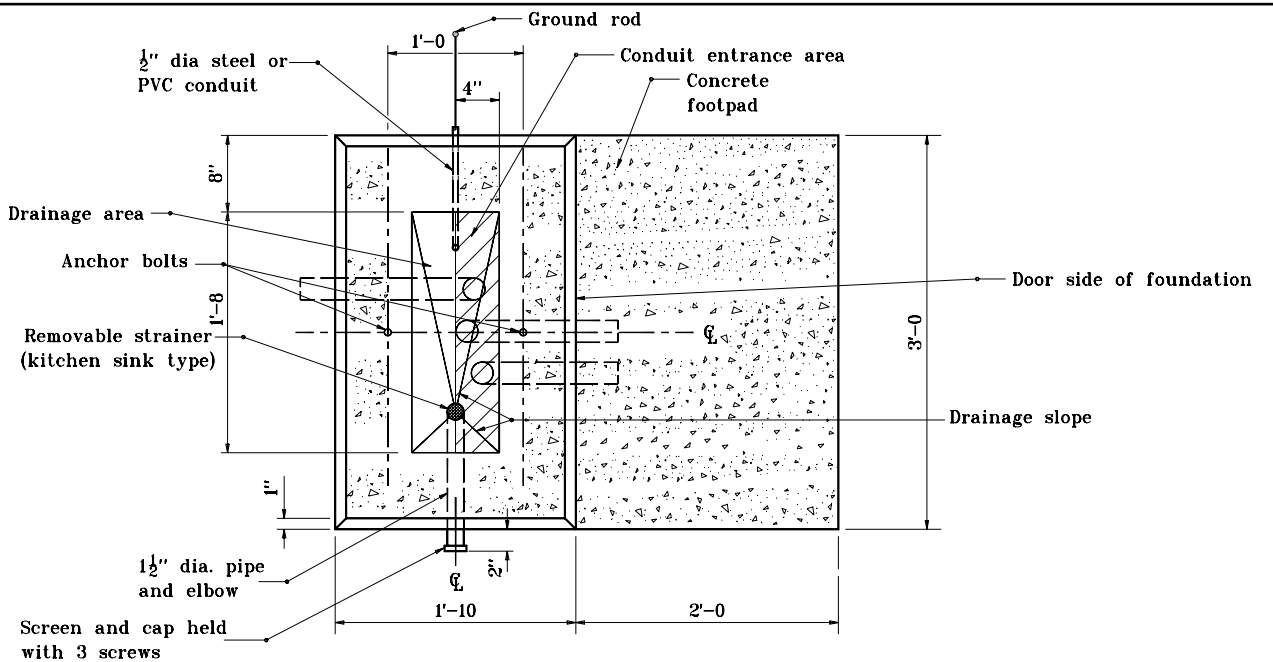


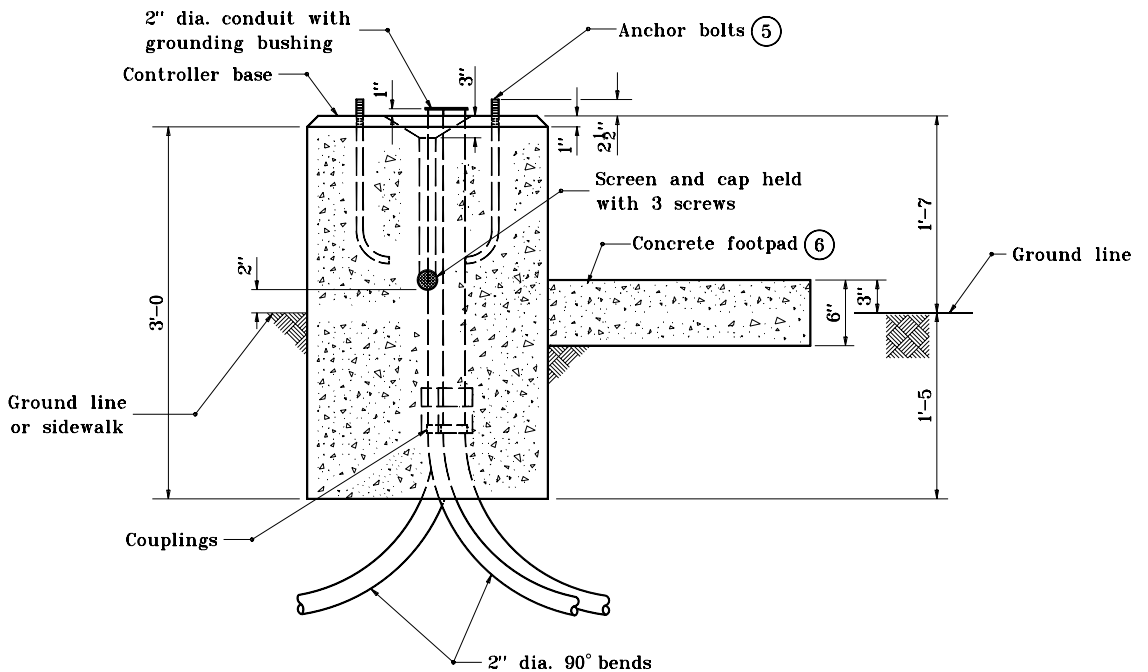


NOTES

See Standard Drawing E 805-SGCF-03 for General Notes.

INDIANA DEPARTMENT OF TRANSPORTATION

**CONTROLLER CABINET FOUNDATION TYPE M**

SEPTEMBER 1998

STANDARD DRAWING NO. **E 805-SGCF-02**

ANTHONY L. UREMOVICH REGISTERED No. 18095 STATE OF INDIANA PROFESSIONAL ENGINEER

DESIGN STANDARDS ENGINEER

| | |
|---|---|
| DETAILS PLACED IN THIS FORMAT | 11-15-99 |
| /s/ Anthony L. Uremovich<br>DESIGN STANDARDS ENGINEER | 11-15-99<br>DATE |
| /s/ Firooz Zandi<br>CHIEF HIGHWAY ENGINEER | 11-15-99<br>DATE |
| ORIGINALLY APPROVED | 9-01-98 |