GENERAL NOTES

1. See Standard Drawing E 802-SNWW-11 for Detail C.
2. See Standard Drawing E 802-SNWW-11 for Detail D.

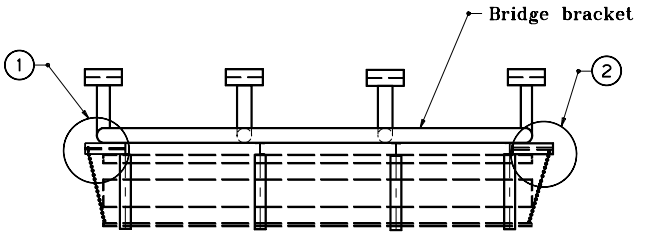

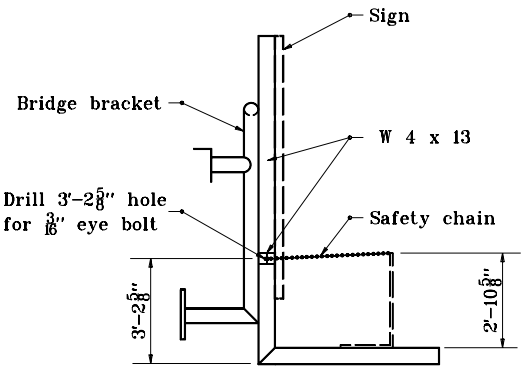

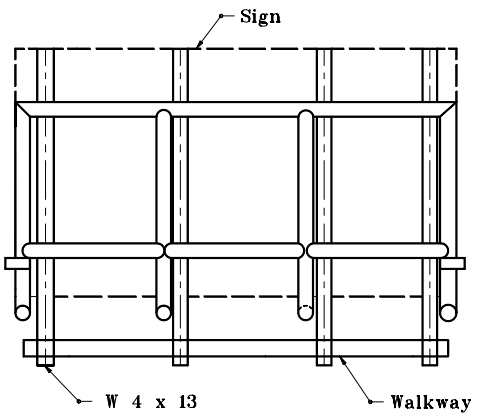

CHAIN SUPPORT FOR BRIDGE BRACKET

INDIANA DEPARTMENT OF TRANSPORTATION

SIGN WALKWAY DETAILS

SEPTEMBER 2001

STANDARD DRAWING NO. **E 802-SNWW-09**

ANTHONY L. UREMOVICH REGISTERED No. 18095 STATE OF INDIANA PROFESSIONAL ENGINEER

DESIGN STANDARDS ENGINEER

/s/ Anthony L. Uremovich 9-04-01
DESIGN STANDARDS ENGINEER DATE

/s/ Firooz Zandi 9-04-01
CHIEF HIGHWAY ENGINEER DATE