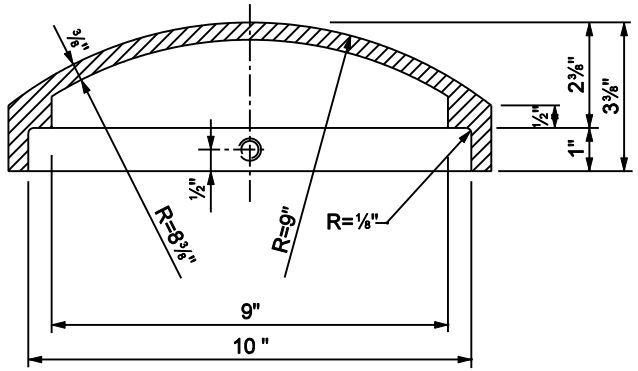

SECTION A-A

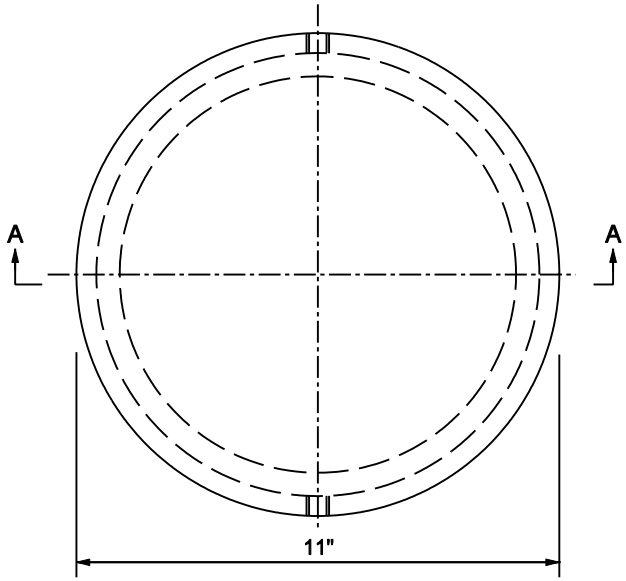

10 IN. O.D. POLE TOP CASTING

GENERAL NOTES

1. Drill and tap two holes 180° apart for ½ in. stainless steel set screws.
2. Sand-cast aluminum alloy.

INDIANA DEPARTMENT OF TRANSPORTATION

ALUMINUM STRUCTURE
POLE TOP CASTING

MARCH 2003

STANDARD DRAWING NO. E 802-SNOH-08

RICHARD L. VanCLEAVE REGISTERED No. 9750 STATE OF INDIANA PROFESSIONAL ENGINEER

DESIGN STANDARDS ENGINEER

/s/ Richard L. VanCleave 3-03-03
DESIGN STANDARDS ENGINEER DATE

/s/ Richard K. Smutzer 3-03-03
CHIEF HIGHWAY ENGINEER DATE