GENERAL NOTES

1. This sheet shall be used in conjunction with Standard Drawing Nos. E 724-BSSJ-05 through 09.

2. Allowable expansion lengths shall not be increased for skewed structures.

(3) Tool concrete edges to $\frac{1}{4}$" to $\frac{3}{8}$" radius.

(4) Anchors shall be spaced at 9 in.

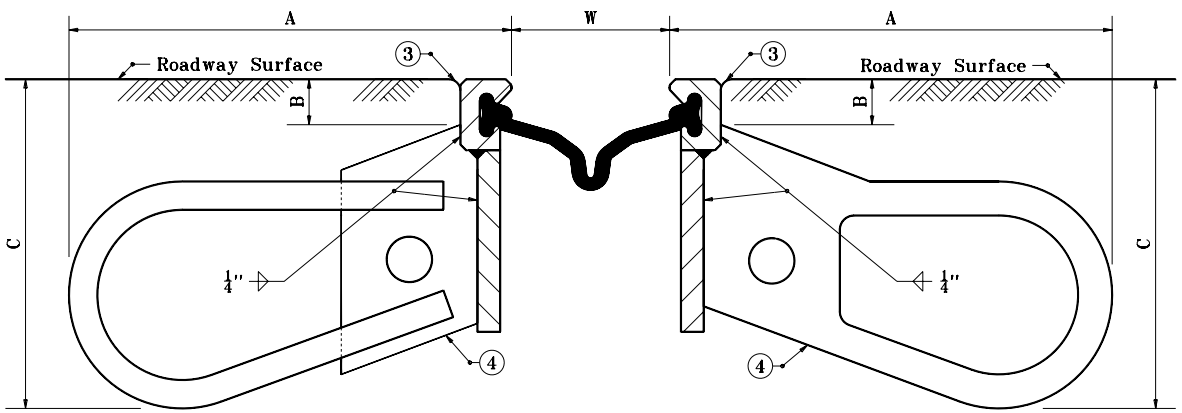

INSTALLATION DETAIL

DIMENSIONS

ALTERNATES	A	B	C
A-1	$9\frac{3}{4}$"	1"	$7\frac{1}{4}$"
A-2			
B-1	$9\frac{3}{4}$"	$\frac{15}{16}$"	$7\frac{1}{8}$"
B-2			
C-1	$9\frac{3}{4}$"	$1\frac{13}{16}$"	$7\frac{1}{4}$"
C-2			
D-1	$9\frac{3}{4}$"	1"	$7\frac{5}{16}$"
D-2			

JOINT SETTING TABLE

Ambient Temperature °F	DIMENSION "W" Expansion Length		
	100'-200'	200'-300'	300'-400'
120°	$2\frac{1}{8}$"	$1\frac{5}{16}$"	$\frac{1}{2}$"
100°	$2\frac{7}{16}$"	$1\frac{3}{4}$"	$1\frac{1}{8}$"
80°	$2\frac{11}{16}$"	$2\frac{3}{16}$"	$1\frac{11}{16}$"
60°	3"	$2\frac{5}{8}$"	$2\frac{1}{4}$"
40°	$3\frac{5}{16}$"	$3\frac{1}{16}$"	$2\frac{13}{16}$"
20°	$3\frac{9}{16}$"	$3\frac{1}{2}$"	$3\frac{3}{8}$"
0°	$3\frac{7}{8}$"	$3\frac{15}{16}$"	4"

INDIANA DEPARTMENT OF TRANSPORTATION

EXPANSION JOINTS
CLASS SS
JUNE 1996

STANDARD DRAWING NO. E 724-BSSJ-04

ANTHONY L. UREMOVICH REGISTERED No. 18095 STATE OF INDIANA PROFESSIONAL ENGINEER

DESIGN STANDARDS ENGINEER

DETAILS PLACED IN THIS FORMAT 11-15-99

/s/ Anthony L. Uremovich 11-15-99
DESIGN STANDARDS ENGINEER DATE

/s/ Firooz Zandi 11-15-99
CHIEF HIGHWAY ENGINEER DATE

ORIGINALLY APPROVED 6-03-96