GENERAL NOTES

1. The optional vertical railing reinforcement shown may be used for bridge railing in lieu of that shown on the plans. Longitudinal reinforcing shall be as shown on the plans.
2. Vertical reinforcing lengths shown are for a 2'-9" railing height. If a higher rail is used, these lengths shall be increased accordingly.

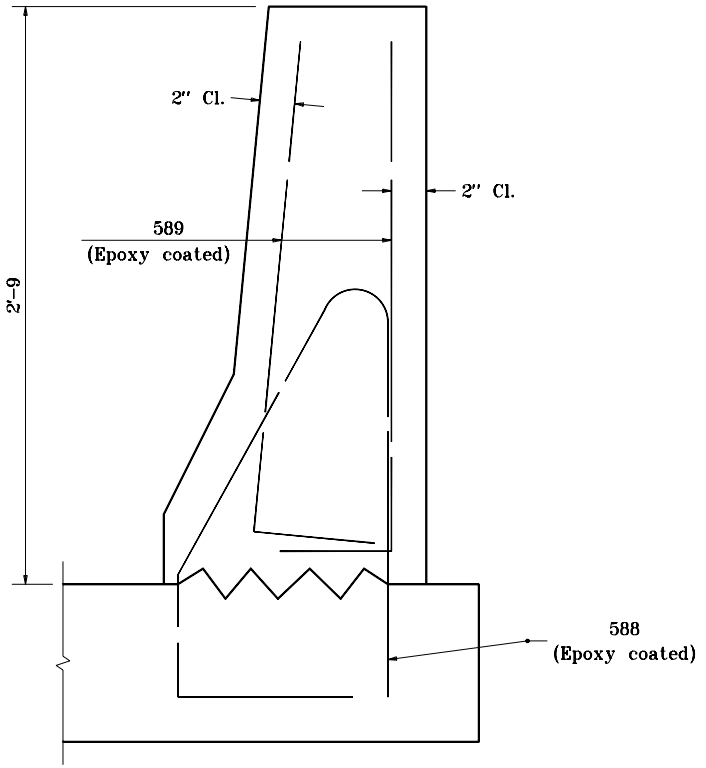

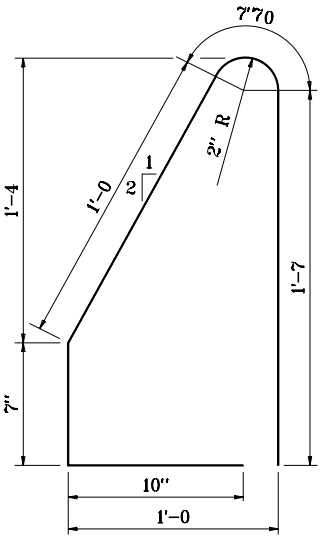

588 x 5'1

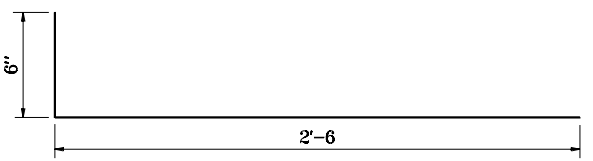

589 x 3'-0

INDIANA DEPARTMENT OF TRANSPORTATION

OPTIONAL RAILING VERTICAL REINFORCMENT SPLICE

SEPTEMBER 1997

STANDARD DRAWING NO. **E 724-BJTS-06**

ANTHONY L. UREMOVICH REGISTERED No. 18095 STATE OF INDIANA PROFESSIONAL ENGINEER

DESIGN STANDARDS ENGINEER

DETAILS PLACED IN THIS FORMAT	11-15-99
/s/ Anthony L. Uremovich DESIGN STANDARDS ENGINEER	11-15-99 DATE
/s/ Firooz Zandi CHIEF HIGHWAY ENGINEER	11-15-99 DATE
ORIGINALLY APPROVED	9-01-97