GENERAL NOTES

① See Standard Drawing E 720-SDCP-02 for casting details.

② See Standard Drawing E 720-SDCP-03 for casting details.

③ ⅜" x 1½" stainless steel nonthreaded hex head bolt with locknut washer. (typ.)

④ Class A concrete, 6" min. thick. (typ.)

5. Cleanout ports shall be spaced at 250 ft or as shown on plans.

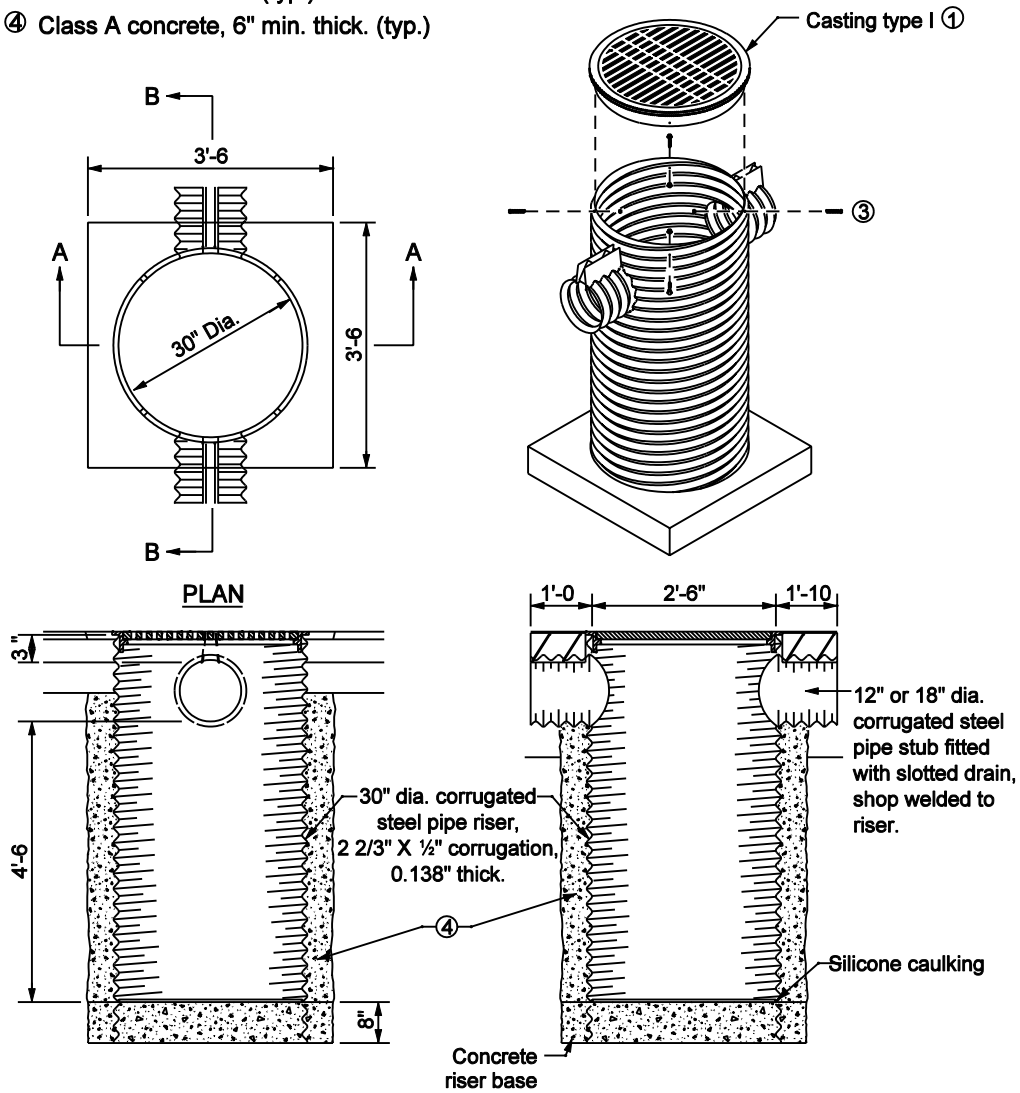

TYPE I
STEEL PIPE PORT

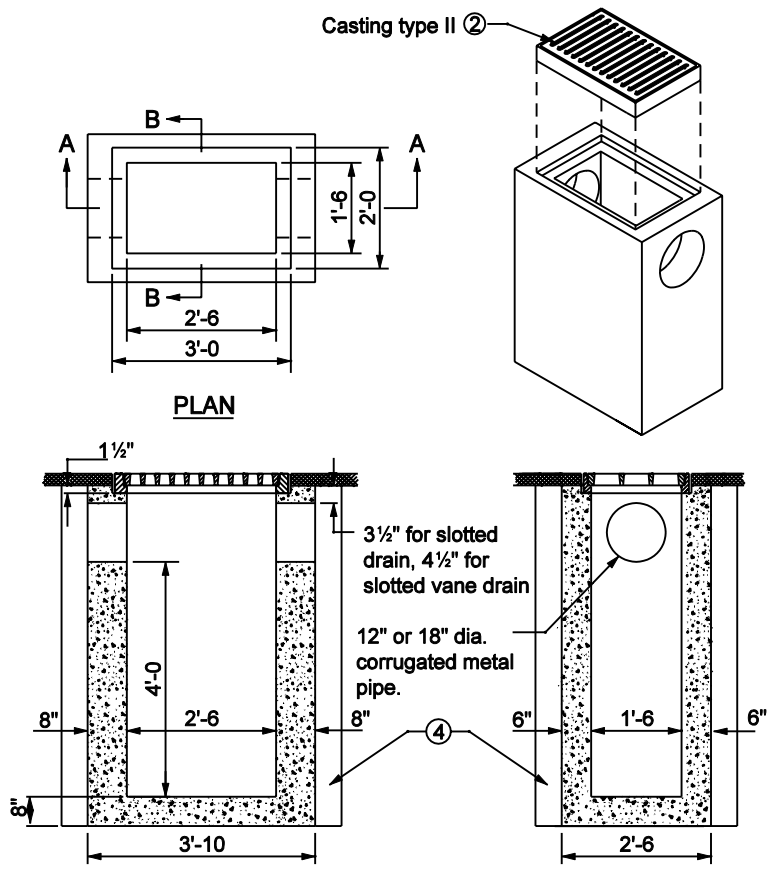

TYPE II
CONCRETE BOX PORT

INDIANA DEPARTMENT OF TRANSPORTATION

SLOTTED DRAIN PIPE
CLEANOUT PORT

MARCH 2003

STANDARD DRAWING NO. E 720-SDCP-01

RICHARD L. VanCLEAVE REGISTERED No. 9750 STATE OF INDIANA PROFESSIONAL ENGINEER

DESIGN STANDARDS ENGINEER

/s/ Richard L. VanCleave 3-03-03
DESIGN STANDARDS ENGINEER DATE

/s/ Richard K. Smutzer 3-03-03
CHIEF HIGHWAY ENGINEER DATE