GENERAL NOTES

1. See Standard Drawing E 720-INST-08 for Section B-B.

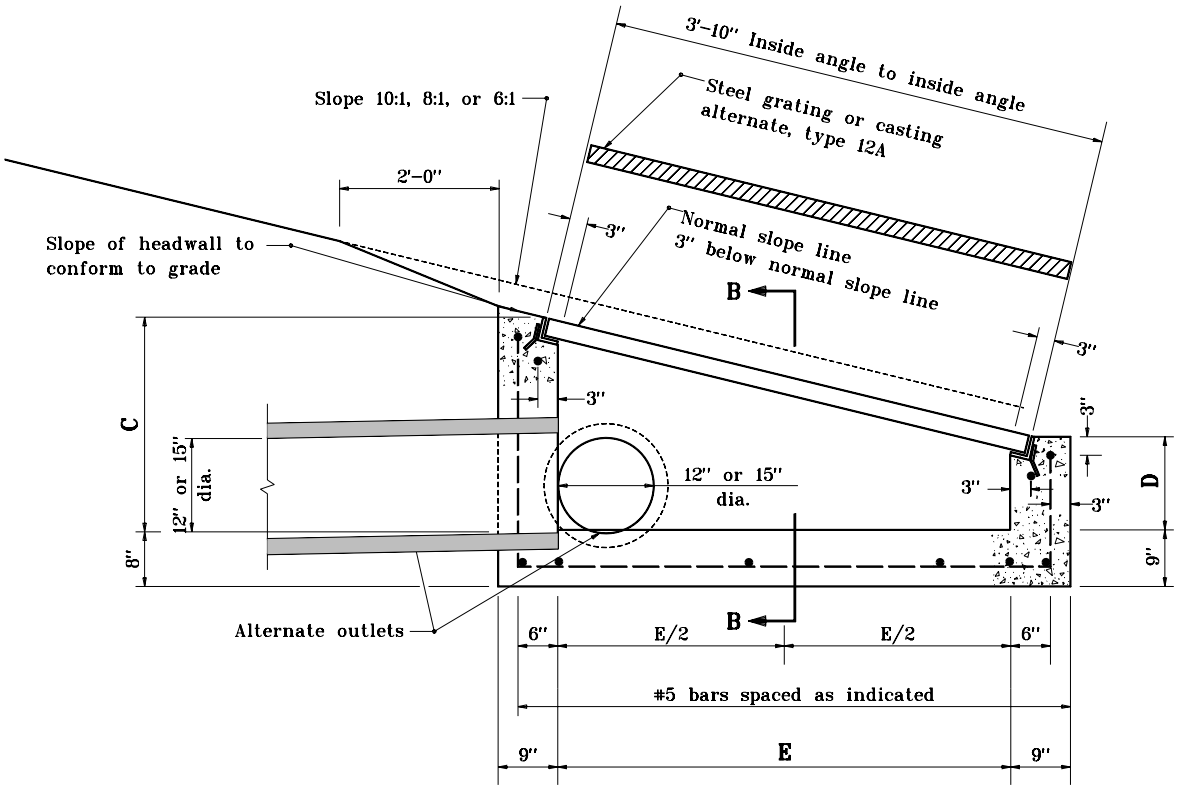


## TYPE P INLET

| TYPE P INLET | | | | | | | | | |
|---|---|---|---|---|---|---|---|---|---|
| PIPE SIZE | 6:1 | | | 8:1 | | | 10:1 | | |
| | C | D | E | C | D | E | C | D | E |
| 12" | 21 1/2" | 13" | 3'-3 1/4" | 21 1/2" | 14 1/2" | 3'-3 3/4" | 21 1/2" | 15 7/8" | 3'-3 3/4" |
| 15" | 21 3/4" | 16 1/4" | 3'-3 1/4" | 24 3/4" | 18" | 3'-3 3/4" | 24 3/4" | 19 1/8" | 3'-3 3/4" |

INDIANA DEPARTMENT OF TRANSPORTATION

INLET TYPE P

MAY 1998

STANDARD DRAWING NO. E 720-INST-09

ANTHONY L. UREMOVICH REGISTERED No. 18095 STATE OF INDIANA PROFESSIONAL ENGINEER

DESIGN STANDARDS ENGINEER

DETAILS PLACED IN THIS FORMAT 11-15-99

/s/ Anthony L. Uremovich 11-15-99
DESIGN STANDARDS ENGINEER DATE

/s/ Firooz Zandi 11-15-99
CHIEF HIGHWAY ENGINEER DATE

ORIGINALLY APPROVED 5-01-98