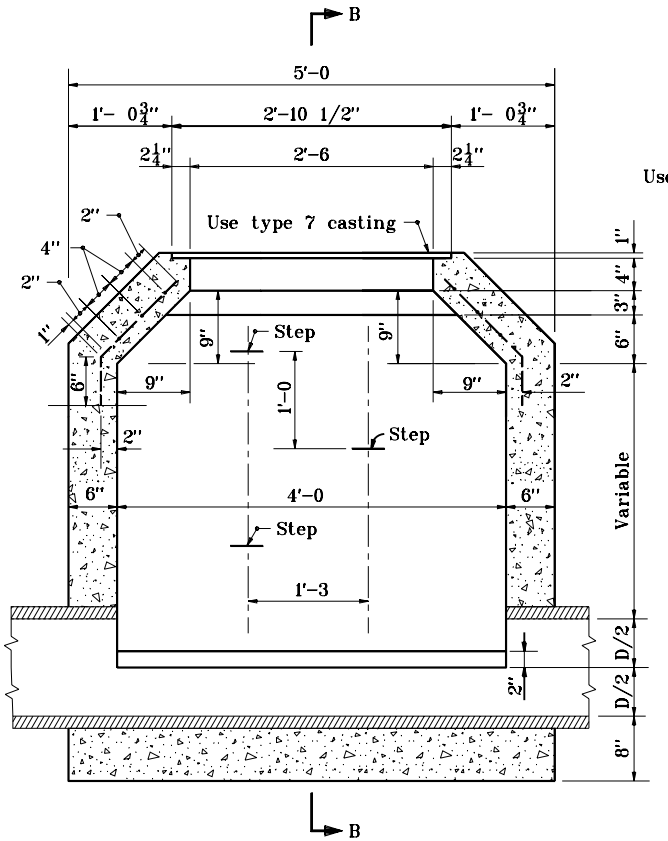

SECTION A-A

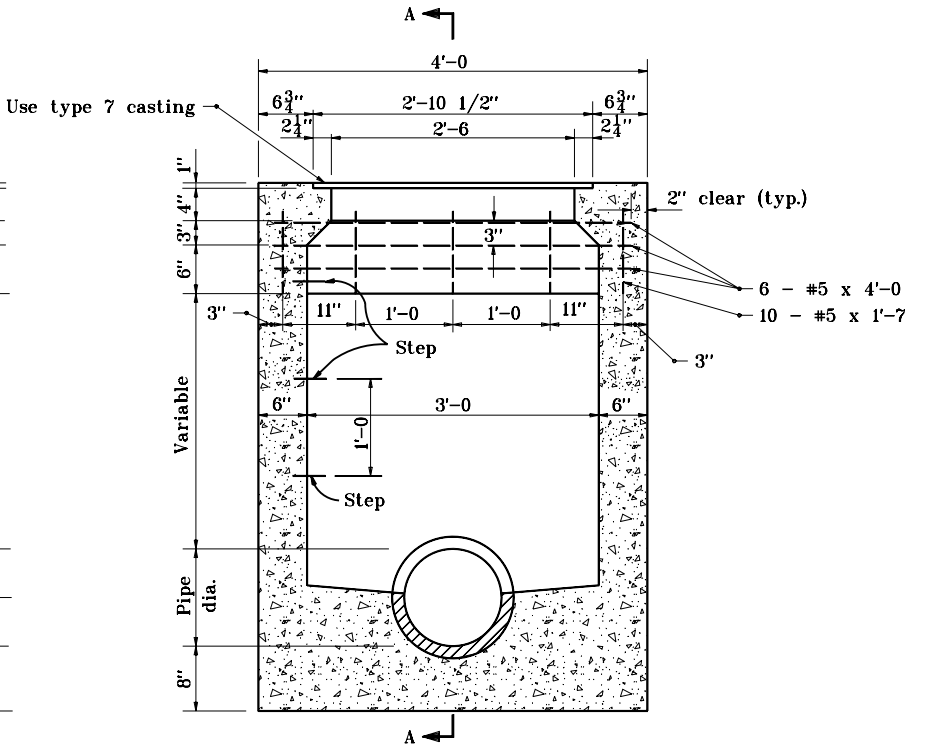

SECTION B-B

INDIANA DEPARTMENT OF TRANSPORTATION

INLET TYPE G

SEPTEMBER 1997

STANDARD DRAWING NO. E 720-INST-05

ANTHONY L. UREMOVICH REGISTERED No. 18095 STATE OF INDIANA PROFESSIONAL ENGINEER

DESIGN STANDARDS ENGINEER

DETAILS PLACED IN THIS FORMAT	11-15-99
/s/ Anthony L. Uremovich DESIGN STANDARDS ENGINEER	11-15-99 DATE
/s/ Firooz Zandi CHIEF HIGHWAY ENGINEER	11-15-99 DATE
ORIGINALLY APPROVED	9-01-97