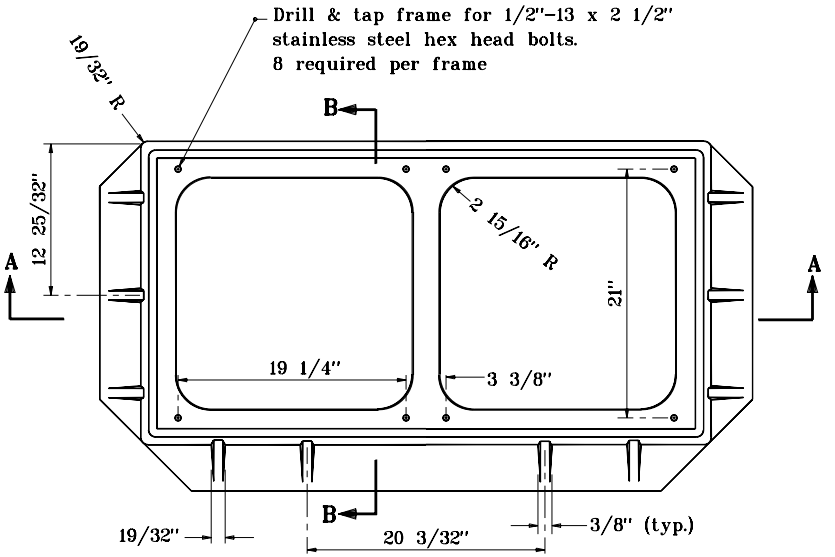

PLAN

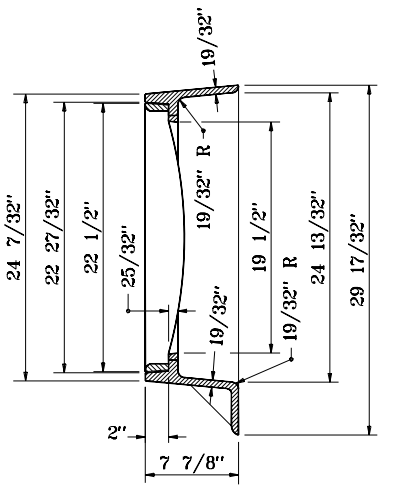

SECTION B-B

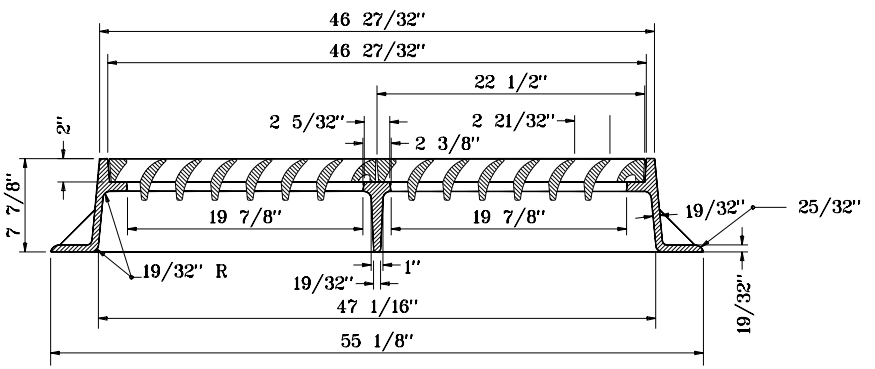

SECTION A-A

FRAME
CASTING TYPE 5

INDIANA DEPARTMENT OF TRANSPORTATION	
CASTING TYPE 5 FRAME SEPTEMBER 2001	
STANDARD DRAWING NO. **E 720-ICCA-01**	
RICHARD L. VanCLEAVE REGISTERED No. 9750 STATE OF INDIANA PROFESSIONAL ENGINEER DESIGN STANDARDS ENGINEER	/s/ Anthony L. Uremovich — DESIGN STANDARDS ENGINEER — 9-04-01 DATE /s/ Firooz Zandi — CHIEF HIGHWAY ENGINEER — 9-04-01 DATE