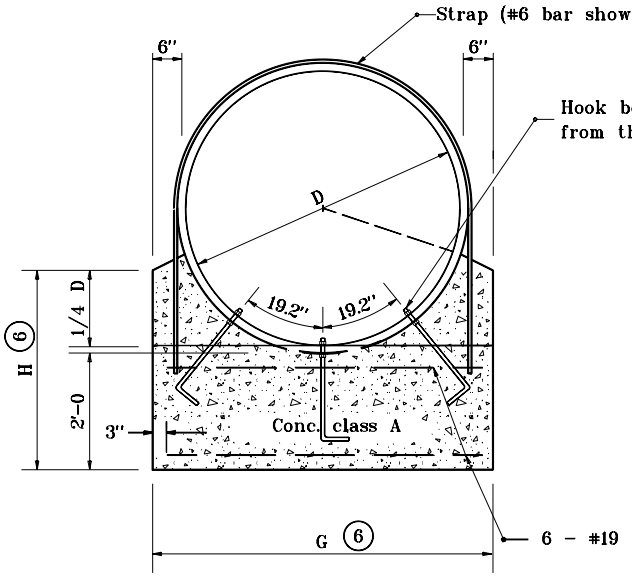

ANCHOR FOR STRUCTURAL PLATE PIPE
FRONT ELEVATION

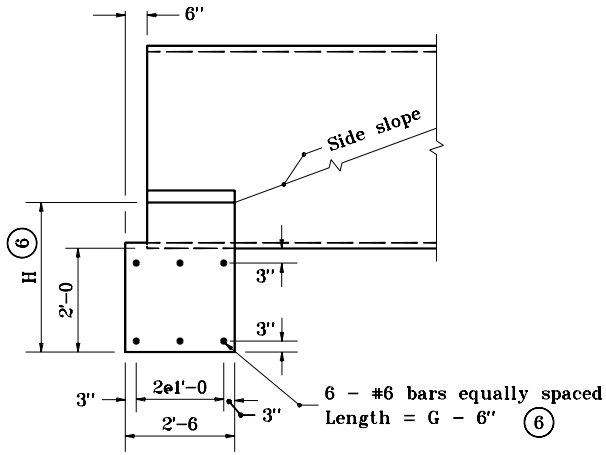

SIDE ELEVATION

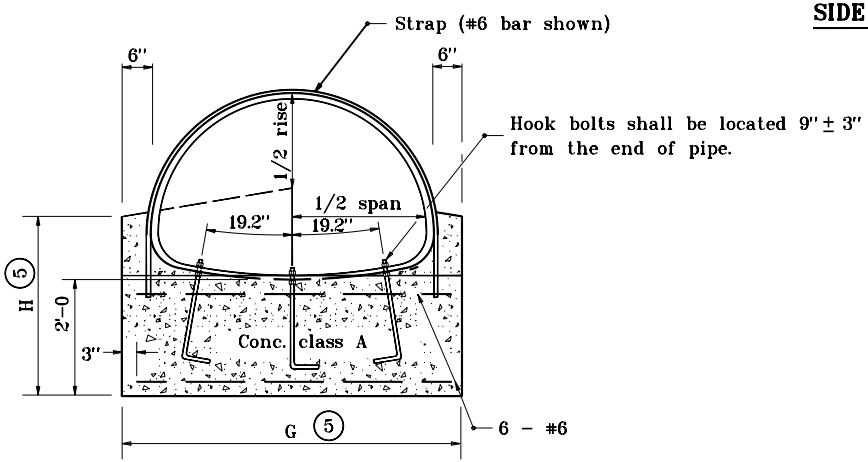

ANCHOR FOR STRUCTURAL PLATE PIPE-ARCH
FRONT ELEVATION

GENERAL NOTES

1. Anchor straps shall be used at both upsteam and downstream ends of all structural plate pipes and pipe-arches.
2. See Standard Drawing E 715-PASD-01 for anchor strap details.
3. Hook bolts, and anchor straps shall be used at all structural plate pipes and pipe arches with a diameter or span of 84" or greater.
4. See Standard Drawing E 715-PAHB-01 for hook bolt details.

(5) For dimension, enter chart on Standard Drawing E 717-ANCH-01 or E 717-ANCH-03 with known span and rise.

(6) For dimension, enter chart on Standard Drawing E 717-ANCH-02 with known dimension D.

INDIANA DEPARTMENT OF TRANSPORTATION

SINGLE STRUCTURAL PLATE PIPE CONCRETE ANCHOR

JANUARY 1998

STANDARD DRAWING NO. **E 717-SPCA-01**

ANTHONY L. UREMOVICH REGISTERED No. 18095 STATE OF INDIANA PROFESSIONAL ENGINEER

DESIGN STANDARDS ENGINEER

DETAILS PLACED IN THIS FORMAT	7-27-99
/s/ Anthony L. Uremovich DESIGN STANDARDS ENGINEER	7-27-99 DATE
/s/ Firooz Zandi CHIEF HIGHWAY ENGINEER	7-27-99 DATE
ORIGINALLY APPROVED	1-02-98