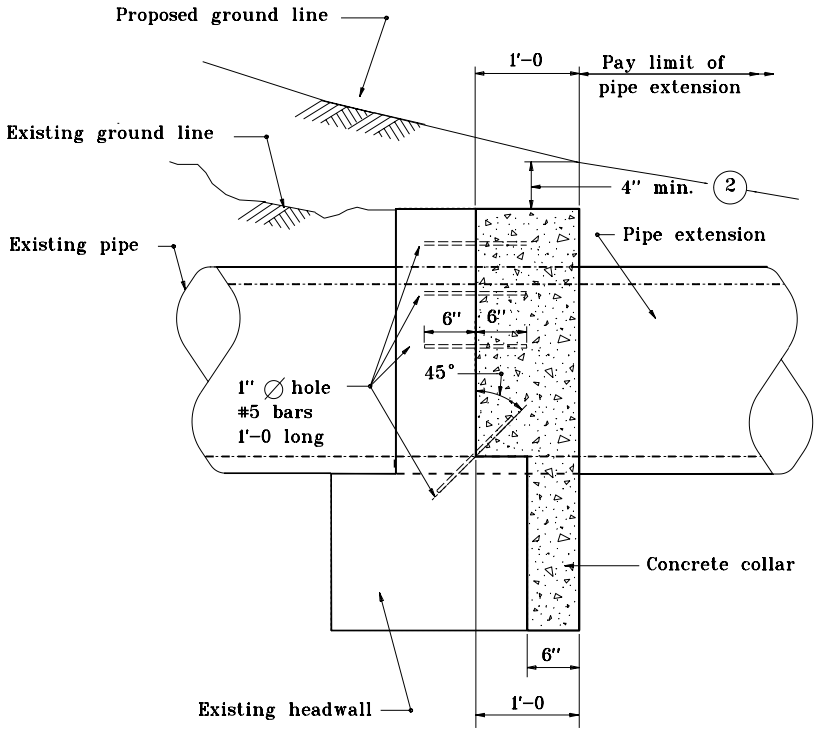

SIDE VIEW

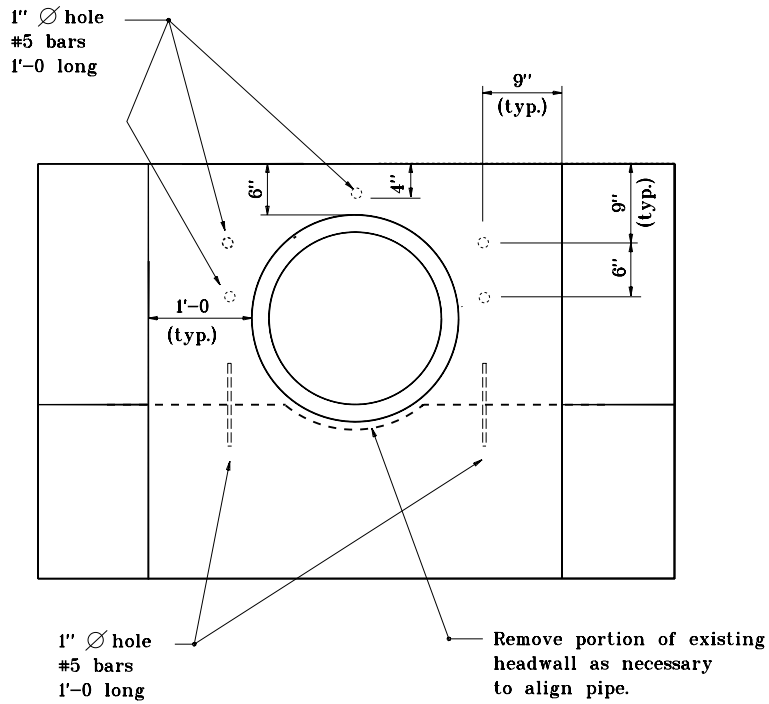

END VIEW

NOTES:

1. For other types of pipe end structures and pipes larger then 33" ∅, collar details are shown on the plans.

(2) Remove portions of existing headwall if required to maintain 4" ground cover.

INDIANA DEPARTMENT OF TRANSPORTATION

CONCRETE COLLAR FOR PIPE EXTENSION

JANUARY 1998

STANDARD DRAWING NO. **E 715-PCEX-01**

ANTHONY L. UREMOVICH REGISTERED No. 18095 STATE OF INDIANA PROFESSIONAL ENGINEER

DESIGN STANDARDS ENGINEER

DETAILS PLACED IN THIS FORMAT 7-27-99

/s/ Anthony L. Uremovich 7-27-99
DESIGN STANDARDS ENGINEER DATE

/s/ Firooz Zandi 7-27-99
CHIEF HIGHWAY ENGINEER DATE

ORIGINALLY APPROVED 1-02-98