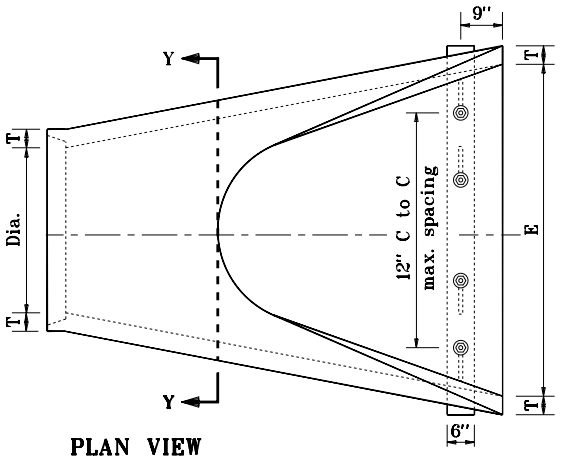

PLAN VIEW

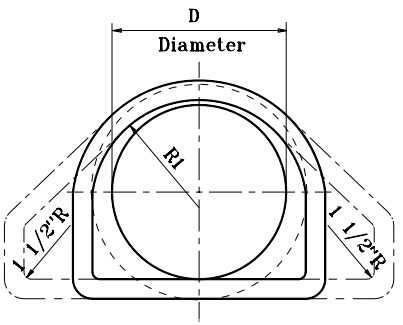

SECTION Y–Y

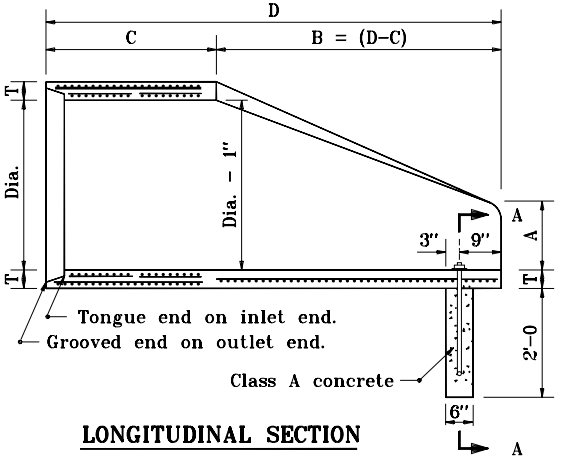

LONGITUDINAL SECTION

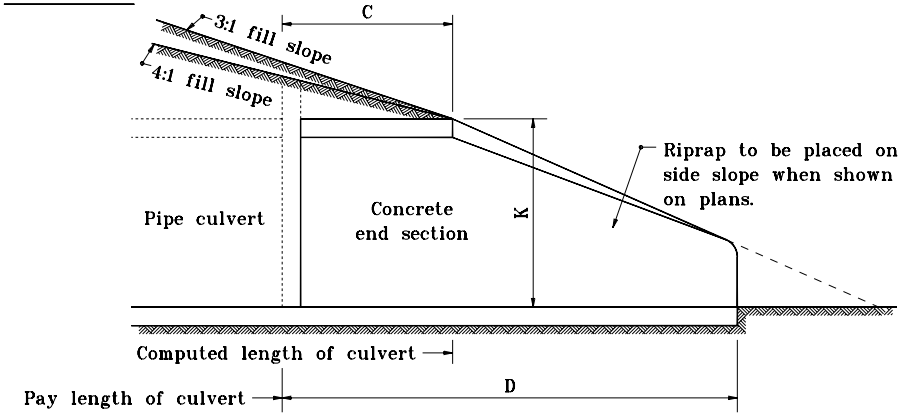

SLOPE DETAIL

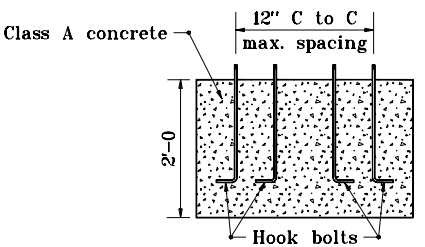

SECTION A–A

Concrete Pipe Toe Anchor

TABLE OF DIMENSIONS

DIA.	T (min.)	A (±1")	C (±1")	D (±1")	E (±1")	K	R1	R2	APPROX. WEIGHT, lb.
12"	2"	5"	4'–3	6'–2	2'–0	1.3	$10\frac{1}{8}$"	9"	800
15"	$2\frac{1}{4}$"	7"	4'–0	6'–3	2'–6	1.5	$12\frac{1}{2}$"	11"	1100
18"	$2\frac{1}{2}$"	11"	4'–1	6'–2	3'–0	1.8	$15\frac{1}{2}$"	12"	1300
21"	$2\frac{3}{4}$"	11"	3'–6	6'–3	3'–6	2.1	$16\frac{1}{8}$"	13"	1500
24"	3"	1'–0	2'–8	6'–3	4'–0	2.3	$16\frac{3}{16}$"	14"	1800
27"	$3\frac{1}{4}$"	1'–1	2'–5	6'–3	4'–6	2.6	$18\frac{9}{16}$"	$14\frac{1}{2}$"	2100
30"	$3\frac{1}{2}$"	1'–2	1'–10	6'–3	5'–0	2.9	$18\frac{1}{2}$"	15"	2400
33"	$3\frac{3}{4}$"	1'–3	3'–6	8'–3	5'–6	3.1	$23\frac{3}{4}$"	$17\frac{1}{2}$"	4100
36"	4"	1'–5	3'–1	8'–3	6'–0	3.4	$24\frac{5}{16}$"	20"	4200

INDIANA DEPARTMENT OF TRANSPORTATION

PRECAST CONCRETE END SECTION

MAY 1998

STANDARD DRAWING NO. **E 715–PCES–01**

ANTHONY L. UREMOVICH REGISTERED No. 18095 STATE OF INDIANA PROFESSIONAL ENGINEER

DESIGN STANDARDS ENGINEER

DETAILS PLACED IN THIS FORMAT 11-15-99

/s/ Anthony L. Uremovich 11-15-99
DESIGN STANDARDS ENGINEER DATE

/s/ Firooz Zandi 11-15-99
CHIEF HIGHWAY ENGINEER DATE

ORIGINALLY APPROVED 5-01-98