PIPE DIA.	END SECTION THICK. (in.)	DIMENSIONS					APPROX. SLOPE	BODY
		A (±1")	B (Max.)	H (±1")	L (±1½")	W (±2")		
12	.064	6	6	6	21	24	2½:1	1 Pc.
15	.064	7	8	6	26	30	2½:1	1 Pc.
18	.064	8	10	6	31	36	2½:1	1 Pc.
21	.064	9	12	6	36	42	2½:1	1 Pc.
24	.064	10	13	6	41	48	2½:1	1 Pc.
30	.079	12	16	8	51	60	2½:1	1 Pc.
36	.079	14	19	9	60	72	2½:1	2 Pc.

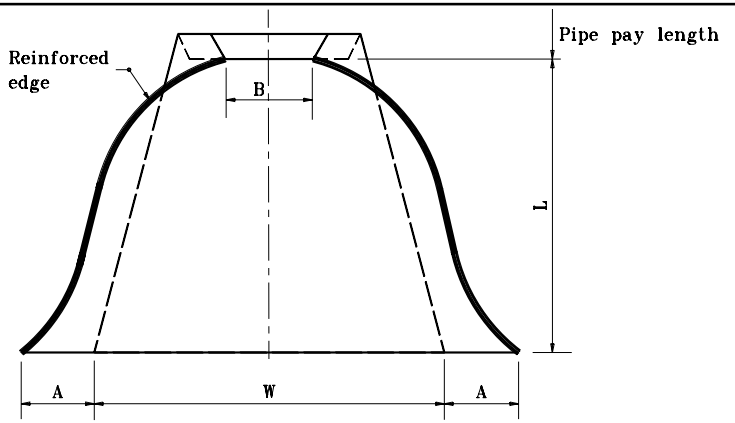

PLAN VIEW

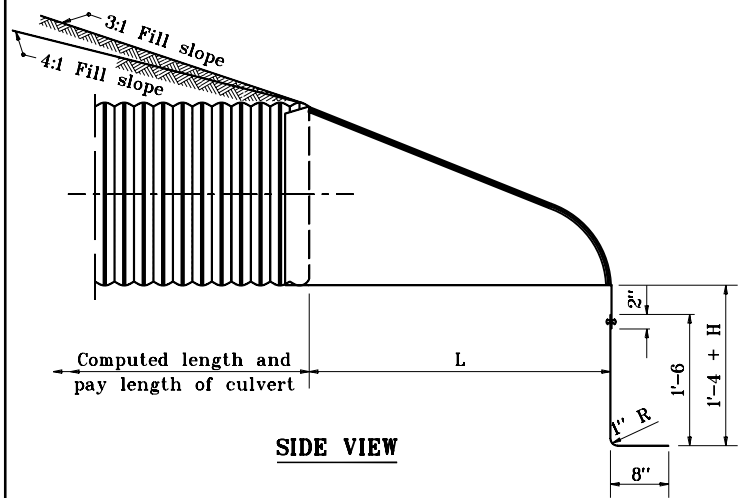

SIDE VIEW

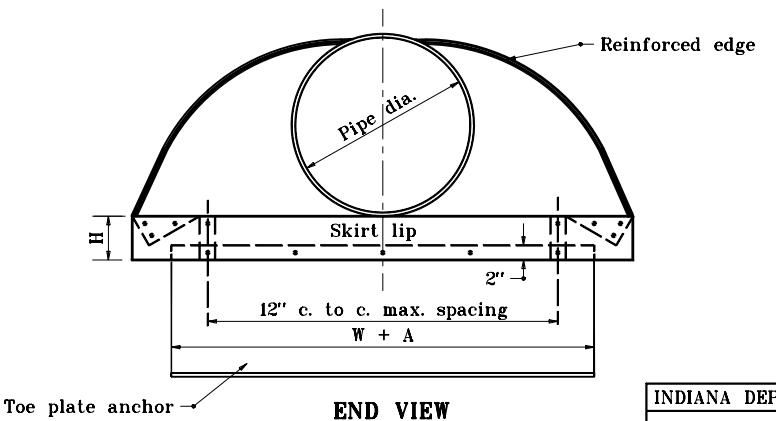

END VIEW

INDIANA DEPARTMENT OF TRANSPORTATION

METAL PIPE END SECTION

JANUARY 1998

STANDARD DRAWING NO. E 715-MPES-01

ANTHONY L. UREMOVICH REGISTERED No. 18095 STATE OF INDIANA PROFESSIONAL ENGINEER

DESIGN STANDARDS ENGINEER

DETAILS PLACED IN THIS FORMAT 11-15-99

/s/ Anthony L. Uremovich 11-15-99
DESIGN STANDARDS ENGINEER DATE

/s/ Firooz Zandi 11-15-99
CHIEF HIGHWAY ENGINEER DATE

ORIGINALLY APPROVED 1-02-98