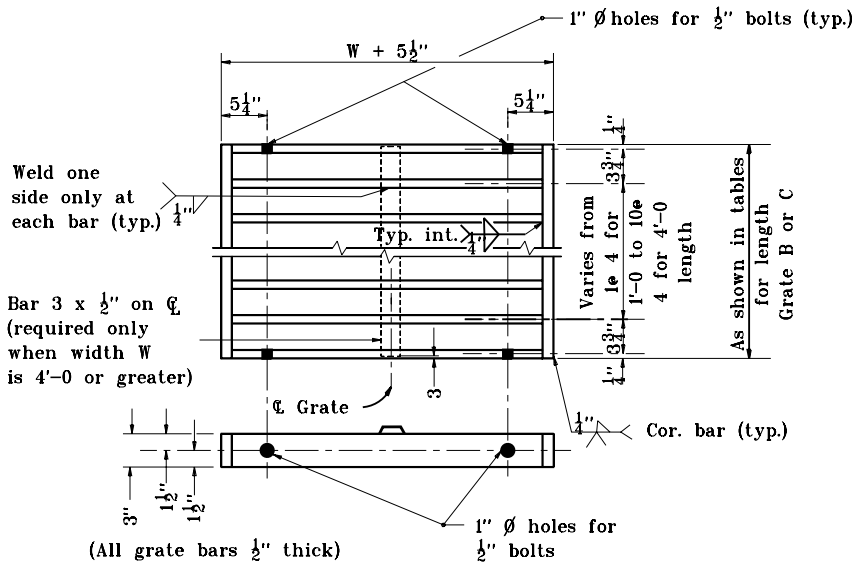

GRATE B & C

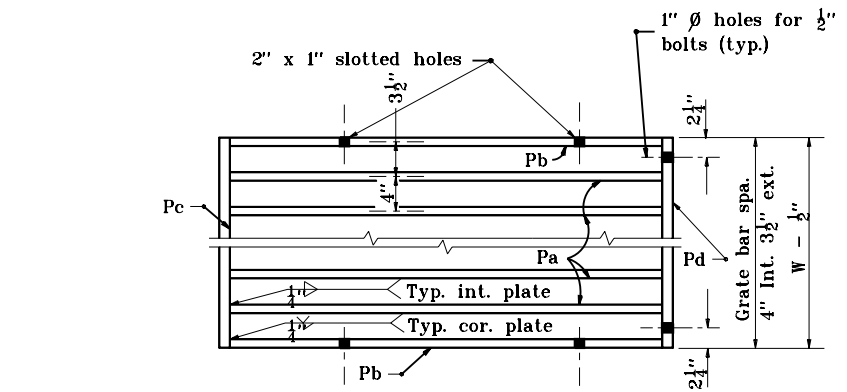

PLAN VIEW

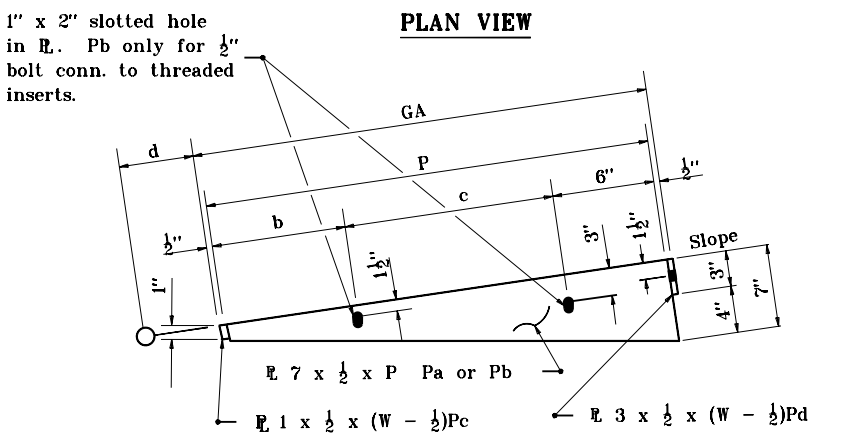

ELEVATION
GRATE A

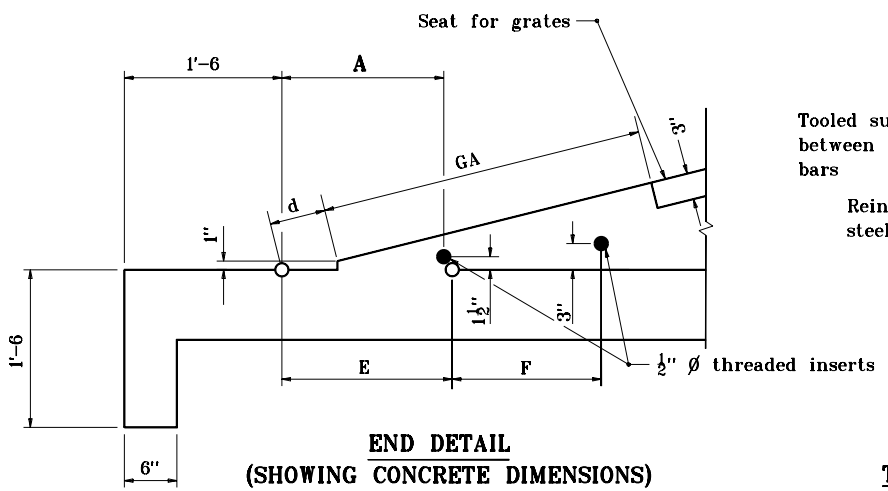

END DETAIL
(SHOWING CONCRETE DIMENSIONS)

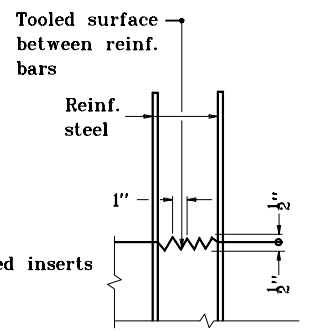

TYPE A CONSTR. JOINT

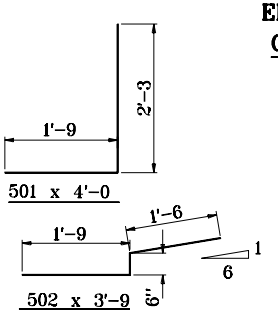

INDIANA DEPARTMENT OF TRANSPORTATION

GRATED BOX END
SECTION TYPE II

JANUARY 1999

STANDARD DRAWING NO. E 715-GBTT-02

ANTHONY L. UREMOVICH REGISTERED No. 18095 STATE OF INDIANA PROFESSIONAL ENGINEER

DESIGN STANDARDS ENGINEER

DETAILS PLACED IN THIS FORMAT 11-15-99

/s/ Anthony L. Uremovich 11-15-99
DESIGN STANDARDS ENGINEER DATE

/s/ Firooz Zandi 11-15-99
CHIEF HIGHWAY ENGINEER DATE

ORIGINALLY APPROVED 1-04-99